345 Carlingview Drive
Toronto, Ontario M9W 6N9
Tel.: 416.734.3300
Fax: 416.231.1626
Toll Free: 1.877.682.8772

www.tssa.org

December 3, 2025

ABSA THE PRESSURE EQUIPMENT SAFETY AUTHORITY
9410 20 AVE NW
EDMONTON AB T6N 0A4

Workorder Type: Registration - Fitting(Conventional)
Workorder No: 14774906
Your Reference No.: 0A25318.2 - 2025-04213 - F&G Industries LLC
Registered to: F&G Industries LLC

Dear Kristine Trepanier,

Technical Standards and Safety Authority (TSSA) is pleased to inform you that your submission has been reviewed and registered as follows:

CRN : 0A25318.25
Main Design No.: Catalog: FT & OL Rev 0625
Expiry Date: Jul 15, 2035

Please be advised that a valid quality control system must be maintained for the fitting registration to remain valid until the expiry date.

The stamped copy of the approved registration and the invoice are mailed separately (There will be no hard copies for electronic submissions). Should you have any questions or require further assistance, please contact a Customer Service Advisor at 1.877.682.TSSA (8772) or e-mail customerservices@tssa.org. We will be happy to assist you. When contacting TSSA regarding this file, please refer to the Service Request number provided above.

Yours truly,

Junho Hong P.Eng. PE. PMP.
Engineer, BPV
Tel. : +1 416-734-6233
Email : JHong@tssa.org

Alberta Government

the pressure equipment safety authority

AB-41 2024-03

STATUTORY DECLARATION
Registration of Fittings
Single or Multiple Fitting Designs within one Fitting Category

In this space, show facsimile of manufacturer's logo or trademark as it will appear on the fitting.
FNG
F&G Industries

I, Tian Ma (name of applicant), CEO (position title) (must be in a position of authority)

of F&G Industries LLC (name of manufacturer)

located at No.22, 5th Rd, PSTP Park, Jianhu, Yancheng, Jiangsu, China (plant address)

do solemnly declare that the fittings listed hereunder, which are subject to the Safety Codes Act (select only one)

☒ comply with the requirements of ASME B16.11, MSS SP-83, MSS SP-95, MSS SP-97 (title of recognized North American Standard) which specifies the dimensions, materials of construction, pressure/temperature ratings and identification marking of the fittings, or

☐ are not covered by the provisions of a recognized North American standard and are therefore manufactured to comply with _____ (title of code of construction or other applicable document) as supported by the attached data which identifies the dimensions, materials of construction, pressure/temperature ratings and the basis for such ratings, and the identification marking of the fittings.

I further declare that the manufacture of these fittings is controlled by a quality control program which has been verified as described in the below Table as being suitable for the manufacturing of these fittings to the stated standard, regulation, code, guideline or other applicable document. The fittings covered by the declaration for which I seek registration are as provided in the Supplementary Sheet(s) attached.

Quality Program Verification and Manufacturing Sites

A copy of the Quality Certificate from each manufacturing site must be included

Item #	Product Description, Model or Series	Quality Program	Scope of Certification	Expiry Date	Verifying Organization	Location(s) Plant Name and address
1.	Forged Steel Fittings	ISO 9001	Manufacture of forged steel pipe fittings and flanges	2027-09-15	Beijing Sanxing 9000 Cert. Body	No.22, 5th Rd, PSTP Park, Jianhu, Yancheng, Jiangsu, China
2.						

Tracking #:_____

In support of this application, the following information, calculations and/or test data are attached:

Catalogue attached

(Signature of the Declarer) 06/20/25 (Date)

DECLARED before me at Houston (city) in the State of Texas (province, territory, or state)

this 20TH day of JUNE (Month), 2025 (Year)

(print) Steffany Laure Starks (a Commissioner of Oaths or Notary Public)

(sign) (a Commissioner of Oaths or Notary Public)

07/01/25 (expiry date (m/dd/yy))

STEFFANY LAUREN STARKS
Notary Public, State of Texas
Comm. Expires 07-01-2025
Notary ID 133186737

Commissioner of Oaths / Notary Public in and for: Harris County, Texas (province, territory, or state)

For ABSA Office Use Only:

NOTES:

To the best of my knowledge and belief, the application meets the requirements of the Safety Codes Act and CSA Standard B51, Part 1, Clause 4.2, and is accepted for registration in Category A.

CRN:

Registered Date:

Expiry Date: July 15, 2035

TECHNICAL STANDARDS & SAFETY AUTHORITY TSSA

The stamp size has been optimized for 11x17 documents. This Document has been digitally signed and approved.

Signature:

(Signature of the Administrator/SCO)

The information you provide is necessary only for the administration of the programs as required by the Alberta Safety Codes Act and Regulations in the Pressure Equipment Discipline

Technical Standards and Safety Authority

Boilers and Pressure Vessels Safety Program

REGISTERED

C.R.N.: 0A25318.25

Signed:

Date: December 3, 2025.

See the attached Catalogs:
FT & OL Rev 0625

Tracking #:

Table 1 Scope of Fitting Designs**

Item #	Primary Pressure Bearing / Retaining Component	Material of Construction	Port Connections and Size Range	MDMT	Rated Pressure		Pressure Class(es) / Schedule(s)	Design Code(s) of Construction	Reference Catalogue (pages) or Drawing(s)
					At Ambient Temperature	At Maximum Temperature			

Table 2 Additional Scope Information

List/Attach Additional Detail and References (Product Configurations, Options, Illustrations, etc.)
Example: Series X Options

** For additional alternatives of Table 1, refer to Form AB-41a, Guide for Completing Form AB-41

Doc: FT, Rev: 0625

F&G Industries

PRECISION IN EVERY FIT

Product Catalog

THIS IS PART OF CRN

0A25318.25

Technical Standards and Safety Authority

Boilers and Pressure Vessels Safety Program

1980 Post Oak Blvd Ste 100

Houston, TX 77056

(832) 986-3307 | sales@fng-ind.com

www.fng-ind.com

Our Legacy, Our Future

F&G Industries stands as a symbol of excellence in forged fittings and flanges - built on over five decades of experience, innovation, and family dedication. Our journey began in 1967 with a focus on machining forged components, and over three generations, we've grown into a global manufacturing leader headquartered in Houston, Texas.

As a family-owned company, we merge traditional craftsmanship with cutting-edge technology. With in-house forging, CNC machining, heat treatment, and hot dip galvanization, we maintain full control over production - delivering precision, consistency, and performance in every product.

Today, F&G Industries is proud to serve the oil & gas and industrial sectors with fittings and flanges that meet the highest standards for quality and reliability.

Every Forge, Every Finish

We don’t just manufacture fittings; we craft performance through every stage of production. With a true end-to-end manufacturing approach, we maintain complete control from raw material to final inspection. This ensures exceptional consistency, precision, and reliability in every fitting we ship out.

By combining expert craftsmanship with advanced technology, we deliver products that meet the highest standards of quality. They are built to perform in the most demanding environments and backed by decades of experience.

On Time, Every Time

Our customers operate in industries where every second counts. That’s why F&G Industries guarantees exceptional lead times and seamless delivery. By managing every production step, we ensure your project stays on schedule, every time.

Reliability, Redefined

F&G Industries is redefining what reliability means in forged fittings. Engineered to exceed ISO and CE/PED standards, our fittings deliver enduring strength and performance, even in the most demanding environments. Quality isn’t just a promise; it’s our standard.

Comprehensive Product Line

- **ASME B16.11** Fittings
  - Size 1/8" - 4".
  - Class 2000, 3000, 6000 for threaded.
  - Class 3000, 6000, 9000 for socket welded.
- **MSS SP-83** Unions
  - Size 1/8" - 3".
  - Class 3000, 600 for threaded and socket welded.
- **MSS SP-95** Swage Nipples & Bull Plugs
  - Size 1/8" - 4".
  - Class STD, XS, SCH160, XXS.
- **MSS SP-97** Outlets
  - Size 1/8" - 4".
  - Class STD, XS, SCH160, XXS for buttwelding.
  - Class 3000, 6000, 9000 for threaded and socket welded.

90° Elbow

Specification:ASME B16.11
Material:Carbon, Stainless, Alloy
Sizes:1/8”-4”
Pressure Class:2000, 3000, 6000, 9000



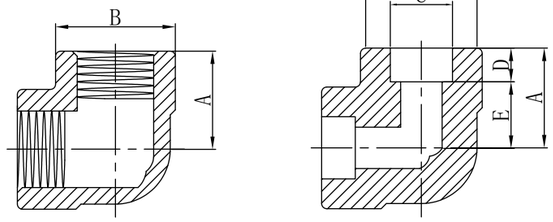

Threaded

CLASS	DIMENSIONS	SIZES (INCHES)											
		1/8	1/4	3/8	1/2	3/4	1	1 1/4	1 1/2	2	2 1/2	3	4
2000	A		0.875	0.969	1.125	1.313	1.500	1.750	2.000	2.375	3.000	3.375	4.188
	B		0.906	1.063	1.313	1.563	1.844	2.219	2.500	3.031	3.625	4.313	5.750
	WEIGHT		0.230	0.290	0.480	0.750	1.080	1.590	2.190	3.520	7.090	11.330	25.080
3000	A	0.875	0.969	1.125	1.313	1.500	1.750	2.000	2.375	2.500	3.250	3.750	4.500
	B	0.906	1.063	1.313	1.563	1.844	2.219	2.500	3.031	3.344	4.000	4.750	6.000
	WEIGHT	0.270	0.350	0.580	0.970	1.420	2.290	2.770	5.430	5.870	11.030	17.500	33.200
6000	A	0.969	1.125	1.313	1.500	1.750	2.000	2.375	2.500	3.250	3.750	4.188	4.500
	B	1.063	1.313	1.563	1.844	2.219	2.500	3.031	3.344	4.000	4.750	5.750	6.000
	WEIGHT	0.370	0.650	1.050	1.640	2.690	3.620	6.130	7.840	14.400	22.950	37.120	33.420

Socket Weld

CLASS	DIMENSIONS	SIZES (INCHES)											
		1/8	1/4	3/8	1/2	3/4	1	1 1/4	1 1/2	2	2 1/2	3	4
3000	A	0.875	0.875	0.969	1.125	1.313	1.500	1.750	2.000	2.375	3.000	3.375	4.188
	B	0.906	0.906	1.063	1.313	1.563	1.844	2.219	2.500	3.031	3.688	4.375	5.750
	C	0.420	0.555	0.690	0.855	1.065	1.330	1.675	1.915	2.406	2.906	3.535	4.545
	D MIN.	0.375	0.375	0.375	0.375	0.500	0.500	0.500	0.500	0.625	0.625	0.625	0.750
	E	0.438	0.438	0.531	0.625	0.750	0.875	1.063	1.250	1.500	1.625	2.250	2.625
	WEIGHT	0.250	0.210	0.260	0.450	0.750	1.050	1.520	2.080	3.370	6.670	11.080	22.590
6000	A	0.875	0.969	1.125	1.313	1.500	1.750	2.000	2.375	2.500	3.250	3.750	4.500
	B	0.906	1.063	1.313	1.563	1.844	2.219	2.500	3.031	3.344	4.000	4.750	6.000
	C	0.420	0.555	0.690	0.855	1.065	1.330	1.675	1.915	2.406	2.906	3.535	4.545
	D MIN.	0.375	0.375	0.375	0.375	0.500	0.500	0.500	0.500	0.625	0.625	0.625	0.750
	E	0.438	0.531	0.625	0.750	0.875	1.063	1.250	1.500	1.625	2.250	2.500	2.750
	WEIGHT		0.260	0.590	0.970	1.420	2.330	2.960	5.710	6.420	12.160	18.690	34.150
9000	A				1.500	1.750	2.000	2.375	2.500	3.000			
	B				1.844	2.219	2.500	3.031	3.344	3.688			
	C				0.855	1.065	1.330	1.675	1.915	2.406			
	D MIN.				0.375	0.500	0.500	0.500	0.500	0.625			
	E				1.000	1.125	1.250	1.375	1.500	2.125			
	WEIGHT				1.700	2.790	3.810	5.710	8.150	11.260			

45° Elbow

Specification:ASME B16.11
Material:Carbon, Stainless, Alloy
Sizes:1/8”-4”
Pressure Class:2000, 3000, 6000, 9000



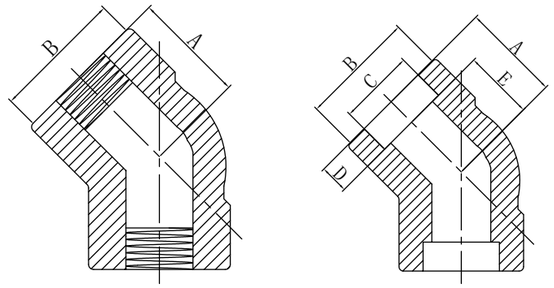

Threaded

CLASS	DIMENSIONS	SIZES (INCHES)											
		1/8	1/4	3/8	1/2	3/4	1	1 1/4	1 1/2	2	2 1/2	3	4
2000	A		0.750	0.750	1.000	1.125	1.250	1.313	1.375	1.750	2.063	2.500	3.125
	B		0.906	1.063	1.313	1.563	1.844	2.219	2.500	3.031	4.000	4.375	6.000
	WEIGHT		0.210	0.240	0.470	0.730	1.030	1.460	1.770	3.030	8.070	9.460	24.570
3000	A	0.750	0.750	1.000	1.125	1.250	1.313	1.375	1.688	1.750	2.063	2.500	3.125
	B	0.906	1.063	1.313	1.563	1.844	2.219	2.500	3.031	3.313	4.000	4.750	6.000
	WEIGHT	0.230	0.300	0.580	0.910	1.290	2.020	2.290	4.540	5.260	7.830	12.990	24.750
6000	A	0.750	1.000	1.125	1.250	1.313	1.375	1.688	1.750	2.063	2.500	3.125	3.125
	B	1.063	1.313	1.563	1.844	2.219	2.500	3.031	3.313	4.000	4.750	6.000	6.000
	WEIGHT	0.560	0.580	0.910	1.540	2.250	2.840	5.120	6.820	10.280	15.000	35.200	24.750

Socket Weld

CLASS	DIMENSIONS	SIZES (INCHES)											
		1/8	1/4	3/8	1/2	3/4	1	1 1/4	1 1/2	2	2 1/2	3	4
3000	A	0.750	0.750	0.750	1.000	1.125	1.250	1.313	1.375	1.750	2.063	2.500	3.125
	B	0.906	0.906	1.063	1.313	1.563	1.844	2.219	2.500	3.031	4.000	4.375	6.000
	C	0.420	0.555	0.690	0.855	1.065	1.330	1.675	1.915	2.406	2.906	3.535	4.545
	D MIN.	0.375	0.375	0.375	0.375	0.250	0.250	0.250	0.250	0.625	0.625	0.625	0.750
	E	0.313	0.313	0.313	0.438	0.250	0.563	0.688	0.813	1.000	1.125	1.250	1.625
	WEIGHT	0.220	0.190	0.220	0.420	0.700	0.950	1.390	1.680	2.960	7.760	8.550	24.060
6000	A	0.750	0.750	1.000	1.125	1.250	1.313	1.375	1.750	1.844	2.063	2.500	3.125
	B	0.906	1.063	1.313	1.563	1.844	2.219	2.500	3.031	3.375	4.000	4.750	6.000
	C	0.420	0.555	0.690	0.855	1.065	1.330	1.675	1.915	2.406	2.906	3.535	4.545
	D MIN.	0.375	0.375	0.375	0.375	0.250	0.250	0.250	0.250	0.625	0.625	0.625	0.750
	E	0.313	0.313	0.438	0.250	0.563	0.688	0.813	1.000	1.125	1.250	1.375	1.625
	WEIGHT		0.220	0.480	0.890	1.260	2.000	2.290	4.490	5.570	8.690	14.200	24.060
9000	A				1.250	1.313	1.375	1.750	1.844	2.063			
	B				1.844	2.219	2.500	3.031	3.375	4.000			
	C				0.855	1.065	1.330	1.675	1.915	2.406			
	D MIN.				0.375	0.500	0.500	0.500	0.500	0.625			
	E				0.625	0.750	0.813	0.875	1.000	1.125			
	WEIGHT				1.310	2.370	2.910	4.310	6.890	10.840			

Tee

Specification:ASME B16.11
Material:Carbon, Stainless, Alloy
Sizes:1/8”-4”
Pressure Class:2000, 3000, 6000, 9000



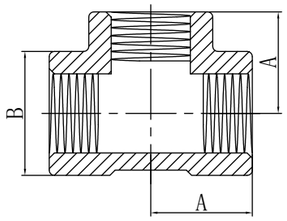

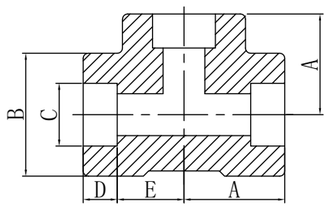

Threaded

CLASS	DIMENSIONS	SIZES (INCHES)											
		1/8	1/4	3/8	1/2	3/4	1	1 1/4	1 1/2	2	2 1/2	3	4
2000	A		0.875	0.969	1.125	1.313	1.500	1.750	2.000	1.375	3.000	3.375	4.188
	B		0.906	1.063	1.313	1.563	1.844	2.219	2.500	3.031	3.688	4.313	5.750
	WEIGHT		0.290	0.380	0.630	0.950	1.410	2.130	2.910	4.410	9.890	14.170	29.700
3000	A	0.875	0.969	1.125	1.313	1.500	1.750	2.000	1.375	2.500	3.250	3.750	4.500
	B	0.906	1.063	1.313	1.563	1.844	2.219	2.500	3.031	1.344	4.000	4.750	6.000
	WEIGHT	0.360	0.470	0.770	1.290	1.890	3.080	3.730	7.000	7.630	14.670	22.650	40.080
6000	A	0.969	1.125	1.313	1.500	1.750	2.000	1.375	2.500	3.250	3.750	4.188	4.500
	B	1.063	1.313	1.563	1.844	2.219	2.500	3.031	3.344	4.000	4.750	5.750	6.000
	WEIGHT	0.470	0.870	1.450	2.240	3.710	4.920	8.130	10.110	19.160	30.430	47.550	47.770

Socket Weld

CLASS	DIMENSIONS	SIZES (INCHES)											
		1/8	1/4	3/8	1/2	3/4	1	1 1/4	1 1/2	2	2 1/2	3	4
3000	A	0.875	0.875	0.969	1.125	1.313	1.500	1.750	2.000	1.375	3.000	3.375	4.188
	B	0.906	0.906	1.063	1.313	1.563	1.844	2.219	2.500	3.031	3.688	4.375	5.750
	C	0.420	0.555	0.690	0.855	1.065	1.330	1.675	1.915	2.406	2.906	3.535	4.545
	D MIN.	0.375	0.375	0.375	0.375	0.500	0.500	0.500	0.500	0.625	0.625	0.625	0.750
	E	0.438	0.438	0.531	0.625	0.750	0.875	1.063	1.250	1.500	1.625	2.250	2.625
	WEIGHT	0.330	0.270	0.340	0.590	0.940	1.290	2.040	2.770	4.110	8.680	13.790	28.600
6000	A	0.875	0.969	1.125	1.313	1.500	1.750	2.000	1.375	2.500	3.250	3.750	4.500
	B	0.906	1.063	1.313	1.563	1.844	2.219	2.500	3.031	3.344	4.000	4.750	6.000
	C	0.420	0.555	0.690	0.855	1.065	1.330	1.675	1.915	2.406	2.906	3.535	4.545
	D MIN.	0.375	0.375	0.375	0.375	0.500	0.500	0.500	0.500	0.625	0.625	0.625	0.750
	E	0.438	0.531	0.625	0.750	0.875	1.063	1.250	1.500	1.625	2.250	2.500	2.750
	WEIGHT		0.340	0.800	1.270	1.910	3.170	4.040	7.550	8.190	16.150	24.430	42.790
9000	A				1.500	1.750	2.000	2.375	2.500	3.000			
	B				1.844	2.219	2.500	3.031	3.344	3.688			
	C				0.855	1.065	1.330	1.675	1.915	2.406			
	D MIN.				0.375	0.500	0.500	0.500	0.500	0.625			
	E				1.000	1.125	1.250	1.375	1.500	2.125			
	WEIGHT				2.310	3.620	5.200	7.550	10.780	15.790			

Cross

Specification:ASME B16.11
Material:Carbon, Stainless, Alloy
Sizes:1/8”-4”
Pressure Class:2000, 3000, 6000, 9000



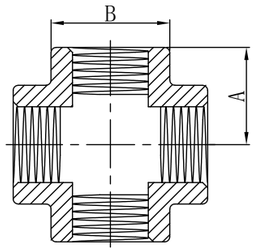

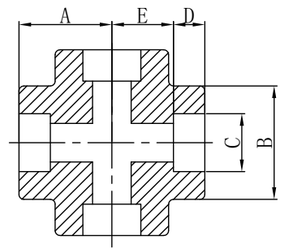

Threaded

CLASS	DIMENSIONS	SIZES (INCHES)											
		1/8	1/4	3/8	1/2	3/4	1	1 1/4	1 1/2	2	2 1/2	3	4
2000	A		0.969	0.969	1.125	1.313	1.500	1.750	2.000	2.375	3.250	3.750	4.500
	B		1.063	1.063	1.313	1.563	1.844	2.219	2.500	3.031	4.000	4.750	6.000
	WEIGHT		0.560	0.470	0.830	1.190	1.640	2.460	3.510	5.500	18.320	26.410	45.760
3000	A	0.969	0.969	1.125	1.313	1.500	1.750	2.000	2.375	2.500	3.250	3.750	4.500
	B	1.063	1.063	1.313	1.563	1.844	2.219	2.500	3.031	3.344	4.000	4.750	6.000
	WEIGHT	0.650	0.580	0.970	1.600	2.280	3.650	4.540	8.470	9.100	17.690	26.130	47.370
6000	A	0.969	1.125	1.313	1.500	1.750	2.000	2.375	2.500	3.250	3.750	4.500	4.500
	B	1.063	1.313	1.563	1.844	2.219	2.500	3.031	3.344	4.000	4.750	6.000	6.000
	WEIGHT	0.650	1.190	1.600	2.650	4.340	5.920	10.500	12.120	23.150	28.130	54.000	43.500

Socket Weld

CLASS	DIMENSIONS	SIZES (INCHES)											
		1/8	1/4	3/8	1/2	3/4	1	1 1/4	1 1/2	2	2 1/2	3	4
3000	A	0.938	0.938	0.969	1.125	1.313	1.500	1.750	2.000	2.375	3.250	3.750	4.500
	B	1.063	1.063	1.063	1.313	1.563	1.844	2.219	2.500	3.031	4.000	4.750	6.000
	C	0.420	0.555	0.690	0.855	1.065	1.330	1.675	1.915	2.406	2.906	3.535	4.545
	D MIN.	0.375	0.375	0.375	0.375	0.500	0.500	0.500	0.500	0.625	0.625	0.625	0.750
	E	0.438	0.438	0.531	0.625	0.750	0.875	1.063	1.250	1.500	1.625	2.250	2.625
	WEIGHT	0.250	0.250	0.420	0.720	1.170	1.490	2.380	3.250	5.080	15.780	24.730	40.000
6000	A				1.313	1.500	1.750	2.000	2.375	2.500	3.250	3.750	
	B				1.563	1.844	2.219	2.500	3.031	3.344	4.000	4.750	
	C				0.855	1.065	1.330	1.675	1.915	2.406	2.906	3.535	
	D MIN.				0.375	0.500	0.500	0.500	0.500	0.625	0.625	0.625	
	E				0.750	0.875	1.063	1.250	1.500	1.625	2.250	2.500	
	WEIGHT				1.550	2.310	3.740	5.250	8.800	9.660	16.750	23.000	
9000	A				1.500	1.750	2.000	2.375	2.500	3.250			
	B				1.844	2.219	2.500	3.031	3.344	4.000			
	C				0.855	1.065	1.330	1.675	1.915	2.406			
	D MIN.				0.375	0.500	0.500	0.500	0.500	0.625			
	E				1.000	1.125	1.250	1.375	1.500	2.125			
	WEIGHT				1.750	4.120	5.250	5.120	8.750	22.190			

Lateral



Specification:ASME B16.11
Material:Carbon, Stainless, Alloy
Sizes:1/8”-4”
Pressure Class: 3000, 6000, 9000

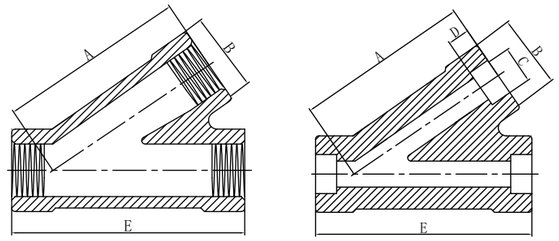

Threaded

CLASS	DIMENSIONS	SIZES (INCHES)							
		1/4	3/8	1/2	3/4 /	1	1 1/4	1 1/2	2
3000	A	1.875	2.125	0.563	3.000	3.500	3.938	4.750	5.000
	B	1.063	1.313	1.563	1.844	2.219	2.500	3.031	3.344
	E	2.688	3.000	3.563	4.125	4.813	5.375	6.438	6.625
	WEIGHT		1.000	1.990	2.730	4.430	5.450	11.100	11.700
6000	A			3.000	3.500	3.938	4.750	5.000	
	B			1.844	2.219	2.500	3.031	3.344	
	E			4.125	4.813	5.375	6.438	6.625	
	WEIGHT			2.380	3.250	5.440	7.190	12.310	

Socket Weld

CLASS	DIMENSIONS	SIZES (INCHES)							
		1/4	3/8	1/2	3/4	1	1 1/4	1 1/2	2
3000	A		1.875	2.125	2.563	3.000	3.500	3.938	4.750
	B		1.063	1.313	1.563	1.844	2.219	2.500	3.031
	C		0.690	0.855	1.065	1.330	1.675	1.915	2.406
	D MIN.		0.375	0.375	0.500	0.500	0.500	0.500	0.625
	E		2.688	3.000	3.563	4.125	4.813	5.375	6.438
	WEIGHT		1.000	0.880	1.560	2.080	3.080	4.220	6.890
6000	A			2.563	3.000	3.500	3.938	4.750	5.000
	B			1.563	1.844	2.219	2.500	3.031	3.344
	C			0.855	1.065	1.330	1.675	1.915	2.406
	D MIN.			0.375	0.500	0.500	0.500	0.500	0.625
	E			3.563	4.125	4.813	5.375	6.438	6.625
	WEIGHT			2.000	3.070	4.850	6.250	11.940	12.500
9000	A			3.000	3.500	3.938	4.750	5.000	
	B			1.844	2.219	2.500	3.031	3.344	
	C			0.855	1.065	1.330	1.675	1.915	
	D MIN.			0.563	0.625	0.688	0.875	0.500	
	E			4.125	4.813	5.375	6.438	6.625	
	WEIGHT			1.750	2.380	3.750	6.880	6.880	

Street Elbow



Specification:ASME B16.11
Material:Carbon, Stainless, Alloy
Sizes:1/8”-4”
Pressure Class:3000, 6000

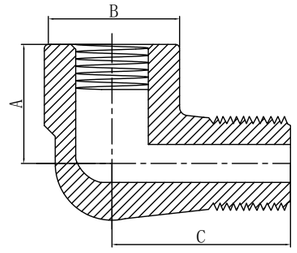

Threaded

CLASS	DIMENSIONS	SIZES (INCHES)								
		1/8	1/4	3/8	1/2	3/4	1	1 1/4	1 1/2	2
3000	A	0.875	0.875	1.000	1.125	1.375	1.750	2.000	2.125	2.500
	B	1.063	1.060	1.313	1.500	1.813	2.188	2.438	3.031	3.313
	C	1.250	1.250	1.500	1.625	1.875	2.250	2.625	2.938	3.313
	WEIGHT	0.270	0.250	0.410	0.610	1.020	1.730	2.420	4.050	5.250
6000	A	0.875	1.000	1.125	1.375	1.750	2.000	2.125	2.500	
	B	1.060	1.313	1.500	1.813	2.188	2.438	3.031	3.313	
	C	1.250	1.500	1.625	1.875	2.250	2.625	2.938	3.313	
	WEIGHT	0.420	0.440	0.690	1.180	2.090	3.120	4.870	7.040	

Socket Weld Couplings & Caps



Specification:ASME B16.11
Material:Carbon, Stainless, Alloy
Sizes:1/8”-4”
Pressure Class:3000, 6000, 9000

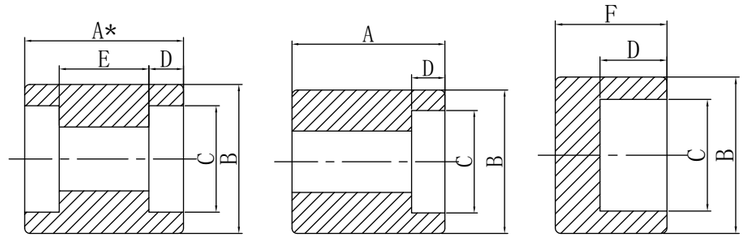

Socket Weld

CLASS	DIMENSIONS	SIZES (INCHES)											
		1/8	1/4	3/8	1/2	3/4	1	1 1/4	1 1/2	2	2 1/2	3	4
3000	A	1.063	1.063	1.125	1.375	1.500	1.750	1.875	2.000	2.500	2.563	2.750	3.000
	AA	1.031	1.031	1.031	1.188	1.406	1.516	1.516	1.516	2.016	2.016	2.016	2.266
	B	0.750	0.875	1.063	1.250	1.500	1.813	2.250	2.500	3.000	3.625	4.313	5.500
	C	0.420	0.555	0.690	0.855	1.065	1.330	1.675	1.915	2.406	2.906	3.535	4.545
	D MIN.	0.375	0.375	0.375	0.375	0.500	0.500	0.500	0.500	0.625	0.625	0.625	0.750
	E	0.250	0.250	0.250	0.375	0.375	0.500	0.500	0.500	0.750	0.750	0.750	0.750
	F	0.688	0.750	0.750	0.875	1.000	1.063	1.188	1.250	1.500	1.563	1.813	2.063
COUPLING	WEIGHT	0.090	0.120	0.160	0.240	0.390	0.570	0.900	1.040	1.790	2.420	4.060	5.730
HAIF COUPLING	WEIGHT	0.100	0.130	0.180	0.320	0.460	0.750	1.240	1.330	2.380	3.550	6.240	8.300
CAP	WEIGHT	0.070	0.100	0.140	0.220	0.360	0.550	1.010	1.270	1.990	3.380	6.300	12.080
6000		1.063	1.063	1.125	1.375	1.500	1.750	1.875	2.000	2.500	2.563	2.750	3.000
	AA	1.063	1.125	1.125	1.156	1.406	1.516	1.516	1.516	2.016	2.016	2.016	2.266
	B	0.875	1.063	1.313	1.500	1.750	2.250	2.500	3.000	3.625	4.250	5.000	6.250
	C	0.420	0.555	0.690	0.855	1.065	1.330	1.675	1.915	2.406	2.906	3.535	4.545
	D MIN.	0.375	0.375	0.375	0.375	0.500	0.500	0.500	0.500	0.625	0.625	0.625	0.750
	E	0.250	0.250	0.250	0.375	0.375	0.500	0.500	0.500	0.750	0.750	0.750	0.750
	F		15/16	15/16	1.000	1.063	1.250	1.313	1.375	1.625	1.688	1.938	2.313
COUPLING	WEIGHT		0.230	0.330	0.450	0.670	1.270	1.370	2.090	3.850	4.930	6.690	8.000
HAIF COUPLING	WEIGHT				0.560	0.800	1.580	1.720	2.990	4.990	5.440	9.500	12.640
CAP	WEIGHT		0.200	0.270	0.420	0.580	1.180	1.410	2.190	3.650	5.630	8.780	14.250
9000					1.375	1.500	1.750	1.797	2.000	2.500			
	AA				1.375	1.500	1.750	1.797	2.000	2.500			
	B				1.813	2.000	2.375	2.750	3.063	3.625			
	C				0.855	1.065	1.330	1.675	1.915	2.406			
	D MIN.				0.375	0.500	0.500	0.500	0.500	0.625			
	E				0.375	0.375	0.500	0.500	0.500	0.750			
COUPLING	WEIGHT				0.620	1.040	1.710	1.690	2.930	4.610			
HAIF COUPLING	WEIGHT				0.880	0.800	1.740	2.220	2.930	4.990			

Threaded Couplings & Caps



Specification:ASME B16.11
Material:Carbon, Stainless, Alloy
Sizes:1/8”-4”
Pressure Class:3000, 6000

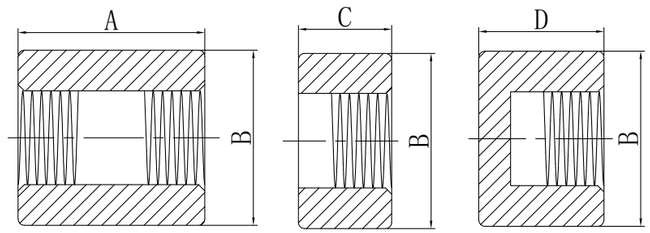

Threaded

CLASS	DIMENSIONS	SIZES (INCHES)											
		1/8	1/4	3/8	1/2	3/4	1	1 1/4	1 1/2	2	2 1/2	3	4
3000	A	1.250	1.375	1.500	1.875	2.000	2.375	2.625	3.125	3.375	3.625	4.250	4.750
	B	0.750	0.750	0.875	1.125	1.375	1.750	2.250	2 1/2	3.000	3.625	4.250	5.500
	C	0.625	0.688	0.750	0.938	1.000	1.188	1.313	1.563	1.688	1.813	2.125	2.375
	D	0.938	1.000	1.000	1.250	1.438	1.625	1.750	1.750	1.875	2.375	2.563	2.688
COUPLING	WEIGHT	0.130	0.110	0.130	0.290	0.420	0.850	1.600	2.260	2.950	4.610	6.890	12.480
HAIF COUPLING	WEIGHT	0.060	0.050	0.060	0.130	0.210	0.420	0.790	1.120	1.530	2.340	3.260	6.480
CAP	WEIGHT	0.100	0.090	0.100	0.240	0.370	0.740	1.350	1.640	2.400	4.450	7.140	12.420
6000	A	1.250	1.375	1.500	1.875	2.000	2.375	2.625	3.125	3.375	3.625	4.250	4.750
	B	0.875	1.000	1.250	1.500	1.750	2.250	2.500	3.000	3.625	4.250	5.000	6.250
	C	0.625	0.688	0.750	0.938	1.000	1.188	1.313	1.563	1.688	1.813	2.125	2.375
	D	1.000	1.063	1.063	1.313	1.500	1.688	1.813	1.875	2.000	2.500	2.688	2 0.938
COUPLING	WEIGHT	0.180	0.280	0.390	0.700	0.950	1.930	2.280	4.200	6.000	8.650	13.410	21.860
HAIF COUPLING	WEIGHT	0.100	0.120	0.190	0.350	0.490	0.970	1.150	2.080	3.050	4.350	6.830	7.050
CAP	WEIGHT	0.160	0.230	0.310	0.550	0.780	1.550	1.900	2.790	4.350	8.100	10.730	15.580

Plugs & Bushings

Specification:ASME B16.11
Material:Carbon, Stainless, Alloy
Sizes:1/8”-4”
Pressure Class:3000, 6000



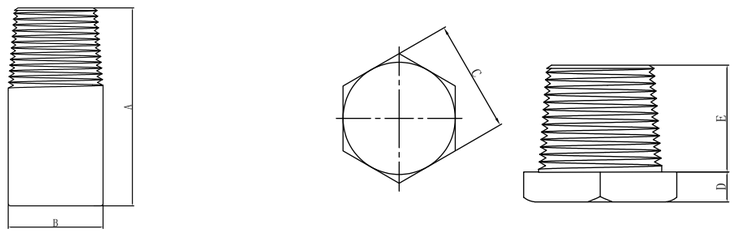

CLASS	DIMENSIONS	SIZES (INCHES)											
		1/8	1/4	3/8	1/2	3/4	1	1 1/4	1 1/2	2	2 1/2	3	4
3000/6000	A	1.375	1.625	1.625	1.750	1.750	2.000	2.000	2.000	2.500	2.750	2.750	3.000
	B	0.406	0.563	0.688	0.813	1.063	1.313	1.688	1.906	2.375	2.875	3.500	4.500
	C	0.438	0.625	0.688	0.875	1.063	1.375	1.750	2.000	2.500	3.000	3.750	4.875
	D MIN.	0.250	0.250	0.313	0.313	0.375	0.375	0.563	0.625	0.688	0.750	0.813	1.000
	E	0.438	0.500	0.563	0.688	0.750	0.844	0.875	0.938	1.000	1.250	1.688	1.781
	F	0.281	0.375	0.438	0.563	0.625	0.813	0.938	1.125	1.313	1.500	1.688	2.500
	G	0.250	0.250	0.313	0.375	0.438	0.375	0.563	0.625	0.688	0.750	0.813	1.250
	H	0.375	0.438	0.375	0.563	0.625	0.750	0.813	0.813	0.875	1.063	1.125	1.250
	J MIN.		0.188	0.188	0.188	0.250	0.250	0.375	0.375	0.375	0.375	0.438	1.000
ROUND PLUG	WEIGHT	0.050	0.110	0.180	0.250	0.410	0.730	1.200	1.570	3.100	5.010	7.400	13.250
HEXAGON PLUG	WEIGHT	0.030	0.060	0.090	0.160	0.270	0.480	0.930	1.350	2.260	3.840	7.080	12.070
SQUARE PLUG	WEIGHT	0.020	0.040	0.060	0.120	0.190	0.350	0.610	0.830	1.410	2.330	3.570	6.280
HEX BUSHING	WEIGHT		0.030	0.040	0.060	0.120	0.210	0.380	0.370	0.770	1.310	3.780	7.310
FLUSH BUSHING	WEIGHT		0.050	0.070	0.030	0.060	0.090	0.170	0.190	0.390	0.620	1.000	1.880

Union

Specification:MSS SP-83
Material:Carbon, Stainless, Alloy
Sizes:1/8”-3”
Pressure Class:3000, 6000



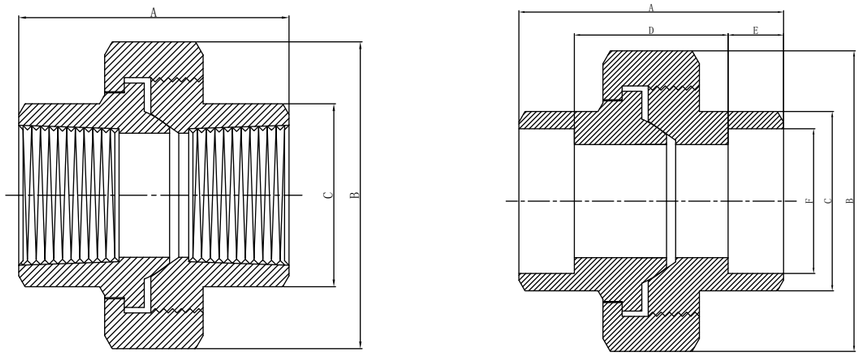

CLASS	DIMENSIONS	SIZES (INCHES)										
		1/8	1/4	3/8	1/2	3/4	1	1 1/4	1 1/2	2	2 1/2	3
3000	A	1.703	1.719	1.875	2.000	2.281	2.500	2.875	3.031	3.500	4.047	4.297
	B	1.375	1.375	1.563	1.813	2.172	2.563	3.125	3.500	4.250	4.875	5.750
	C	0.875	0.875	1.031	1.234	1.484	1.813	2.234	2.484	3.031	3.656	4.406
	D	0.953	0.969	1.125	1.250	1.281	1.500	1.875	2.031	2.250	2.797	3.047
	E MIN.	0.375	0.375	0.375	0.375	0.500	0.500	0.500	0.500	0.625	0.625	0.625
	F	0.420	0.555	0.690	0.855	1.065	1.330	1.675	1.915	2.406	2.906	3.535
	WEIGHT	0.410	0.380	0.540	0.790	1.250	1.800	2.880	3.640	5.810	8.770	12.980
6000	A		1.875	1.984	2.297	2.500	2.875	3.016	3.531	4.266		
	B		1.578	1.813	2.203	2.578	3.109	3.422	4.094	4.875		
	C		1.031	1.234	1.469	1.797	2.172	2.469	3.031	3.656		
	D		1.125	1.234	1.547	1.500	1.875	2.016	2.531	3.016		
	E MIN.		0.375	0.375	0.375	0.500	0.500	0.500	0.500	0.625		
	F		0.555	0.690	0.855	1.065	1.330	1.675	1.915	2.406		
	WEIGHT		0.590	0.840	1.420	2.090	3.400	4.090	7.180	12.440		

BULL PLUG



Specification:MSS SP-95
Material:Carbon, Stainless, Alloy
Sizes:1/8”-4”
Pressure Class:STD, XS, SCH160, XXS

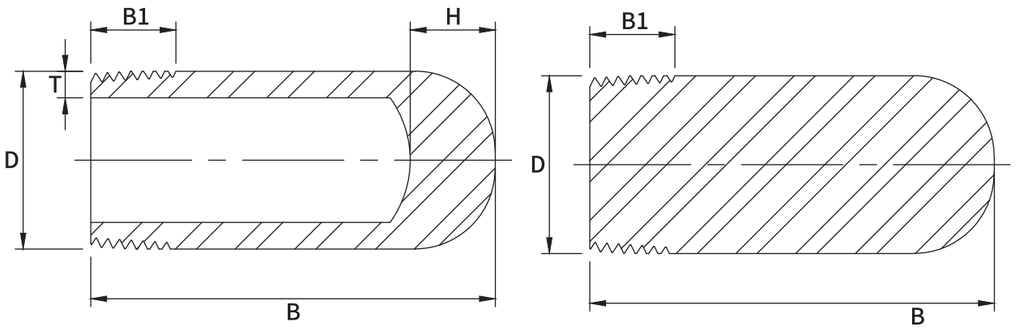

Dimensions are in millimeters.

Nom.Pipe Size	D	B	B1	T(Min)				H
				Sch 40/STD	Sch 80/XS (3M)	Sch160 (6M)	XXS	
1/8	10.3	51	9.5	1.73	2.41	–	–	14
1/4	13.7	51	11.0	2.24	3.02	–	–	14
3/8	17.1	57	12.5	2.31	3.20	–	–	14
1/2	21.3	64	14.5	2.77	3.73	4.78	7.47	14
3/4	26.7	70	16.0	2.87	3. 91	5.56	7.82	18
1	33.4	76	19.0	3.38	4. 55	6.35	9.09	18
1-1/4	42.2	83	20.5	3.56	4.85	6.35	9.70	18
1-1/2	48.3	89	20.5	3.68	5.08	7.14	10.15	18
2	60.3	102	22.0	3.91	5.54	8.74	11.07	20
2-1/2	73.0	127	27.0	5.16	7.01	9.53	14.02	20
3	88.9	152	28.5	5.49	7.62	11.13	15.24	20
4	114.3	178	32.0	6.02	8.56	13.49	17.12	20

SWAGE NIPPLE



Specification:MSS SP-95
Material:Carbon, Stainless, Alloy
Sizes:1/8”-4”
Pressure Class:STD, XS, SCH160, XXS

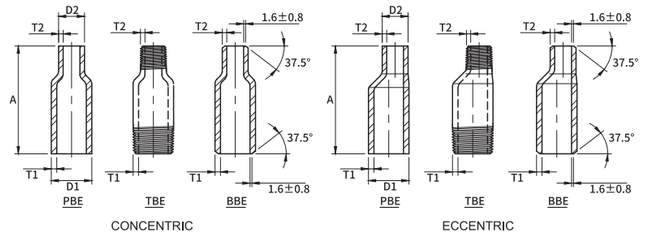

Dimensions are in millimeters.

Nom.Pipe Size	Outside Diameter		End to End "A"	Wall Thickness							
				T1				T2			
	Large End D1	Small End D2		Sch40 (STD)	Sch80 (XS)	Sch160	XXS	Sch40 (STD)	Sch80 (XS)	Sch160	XXS
1/4×1/8	13.7	10.3	57	2.2	3.0	3.7	6.1	1.7	2.4	—	—
3/8×1/8	17.1	10.3	64	2.3	3.2	4.0	6.4	1.7	2.4	—	—
3/8×1/4	17.1	13.7	64	2.3	3.2	4.0	6.4	2.2	3.0	—	—
1/2×1/8	21.3	10.3	70	2.8	3.7	4.8	7.5	1.7	2.4	—	—
1/2×1/4	21.3	13.7	70	2.8	3.7	4.8	7.5	2.2	3.0	—	—
1/2×3/8	21.3	17.1	70	2.8	3.7	4.8	7.5	2.3	3.2	—	—
3/4×1/8	26.7	10.3	76	2.9	3.9	5.6	7.8	1.7	2.4	—	—
3/4×1/4	26.7	13.7	76	2.9	3.9	5.6	7.8	2.2	3.0	—	—
3/4×3/8	26.7	17.1	76	2.9	3.9	5.6	7.8	2.3	3.2	—	—
3/4×1/2	26.7	21.3	76	2.9	3.9	5.6	7.8	2.8	3.7	4.8	7.5
1×1/8	33.4	10.3	89	3.4	4.5	6.4	9.1	1.7	2.4	—	—
1×1/4	33.4	13.7	89	3.4	4.5	6.4	9.1	2.2	3.0	—	—
1×3/8	33.4	17.1	89	3.4	4.5	6.4	9.1	2.3	3.2	—	—
1×1/2	33.4	21.3	89	3.4	4.5	6.4	9.1	2.8	3.7	4.8	7.5
1×3/4	33.4	26.7	89	3.4	4.5	6.4	9.1	2.9	3.9	5.6	7.8
1-1/4×1/8	42.2	10.3	102	3.6	4.9	6.4	9.7	1.7	2.4	—	—
1-1/4×1/4	42.2	13.7	102	3.6	4.9	6.4	9.7	2.2	3.0	—	—
1-1/4×3/8	42.2	17.1	102	3.6	4.9	6.4	9.7	2.3	3.2	—	—
1-1/4×1/2	42.2	21.3	102	3.6	4.9	6.4	9.7	2.8	3.7	4.8	7.5
1-1/4×3/4	42.2	26.7	102	3.6	4.9	6.4	9.7	2.9	3.9	5.6	7.8
1×1	42.2	33.4	102	3.6	4.9	6.4	9.7	3.4	4.5	6.4	9.1
1-1/2×1/8	48.3	10.3	114	3.7	5.1	7.1	10.2	1.7	2.4	—	—
1-1/2×1/4	48.3	13.7	114	3.7	5.1	7.1	10.2	2.2	3.0	—	—
1-1/2×3/8	48.3	17.1	114	3.7	5.1	7.1	10.2	2.3	3.2	—	—
1-1/2×1/2	48.3	21.3	114	3.7	5.1	7.1	10.2	2.8	3.7	4.8	7.5
1-1/2×3/4	48.3	26.7	114	3.7	5.1	7.1	10.2	2.9	3.9	5.6	7.8
1-1/2×1	48.3	33.4	114	3.7	5.1	7.1	10.2	3.4	4.5	6.4	9.1
1-1/2×1-1/4	48.3	42.2	114	3.7	5.1	7.1	10.2	3.6	4.9	6.4	9.7
2×1/8	60.3	10.3	165	3.9	5.5	8.7	11.1	1.7	2.4	—	—
2×1/4	60.3	13.7	165	3.9	5.5	8.7	11.1	2.2	3.0	—	—
2×3/8	60.3	17.1	165	3.9	5.5	8.7	11.1	2.3	3.2	—	—
2×1/2	60.3	21.3	165	3.9	5.5	8.7	11.1	2.8	3.7	4.8	7.5
2×3/4	60.3	26.7	165	3.9	5.5	8.7	11.1	2.9	3.9	5.6	7.8
2×1	60.3	33.4	165	3.9	5.5	8.7	11.1	3.4	4.5	6.4	9.1
2×1-1/4	60.3	42.2	165	3.9	5.5	8.7	11.1	3.6	4.9	6.4	9.7
2×1-1/2	60.3	48.3	165	3.9	5.5	8.7	11.1	3.7	5.1	7.1	10.2
2-1/2×1/8	73.0	10.3	178	5.2	7.0	9.5	14.0	1.7	2.4	—	—
2-1/2×1/4	73.0	13.7	178	5.2	7.0	9.5	14.0	2.2	3.0	—	—
2-1/2×3/8	73.0	17.1	178	5.2	7.0	9.5	14.0	2.3	3.2	—	—
2-1/2×1/2	73.0	21.3	178	5.2	7.0	9.5	14.0	2.8	3.7	4.8	7.5
2-1/2×3/4	73.0	26.7	178	5.2	7.0	9.5	14.0	2.9	3.9	5.6	7.8
2-1/2×1	73.0	33.4	178	5.2	7.0	9.5	14.0	3.4	4.5	6.4	9.1

(Continued)

Dimensions are in millimeters.

Nom.Pipe Size	Outside Diameter		End to End "A"	Wall Thickness							
				T1				T2			
	Large End D1	Small End D2		Sch40 (STD)	Sch80 (XS)	Sch160	XXS	Sch40 (STD)	Sch80 (XS)	Sch160	XXS
2-1/2×1-1/4	73.0	42.2	178	5.2	7.0	9.5	14.0	3.6	4.9	6.4	9.7
2-1/2×1-1/2	73.0	48.3	178	5.2	7.0	9.5	14.0	3.7	5.1	7.1	10.2
2-1/2×2	73.0	60.3	178	5.2	7.0	9.5	14.0	3.9	5.5	8.7	11.1
3×1/8	88.9	10.3	203	5.5	7.6	11.1	15.2	1.7	2.4	—	—
3×1/4	88.9	13.7	203	5.5	7.6	11.1	15.2	2.2	3.0	—	—
3×3/8	88.9	17.1	203	5.5	7.6	11.1	15.2	2.3	3.2	—	—
3×1/2	88.9	21.3	203	5.5	7.6	11.1	15.2	2.8	3.7	4.8	7.5
3×3/4	88.9	26.7	203	5.5	7.6	11.1	15.2	2.9	3.9	5.6	7.8
3×1	88.9	33.4	203	5.5	7.6	11.1	15.2	3.4	4.5	6.4	9.1
3×1-1/4	88.9	42.2	203	5.5	7.6	11.1	15.2	3.6	4.9	6.4	9.7
3×1-1/2	88.9	48.3	203	5.5	7.6	11.1	15.2	3.7	5.1	7.1	10.2
3×2	88.9	60.3	203	5.5	7.6	11.1	15.2	3.9	5.5	8.7	11.1
3×2-1/2	88.9	73.0	203	5.5	7.6	11.1	15.2	5.2	7.0	9.5	14.0
3-1/2×1/8	101.6	10.3	203	5.7	8.1	—	—	1.7	2.4	—	—
3-1/2×1/4	101.6	13.7	203	5.7	8.1	—	—	2.2	3.0	—	—
3-1/2×3/8	101.6	17.1	203	5.7	8.1	—	—	2.3	3.2	—	—
3-1/2×1/2	101.6	21.3	203	5.7	8.1	—	—	2.8	3.7	4.8	7.5
3-1/3×3/4	101.6	26.7	203	5.7	8.1	—	—	2.9	3.9	5.6	7.8
3-1/2×1	101.6	33.4	203	5.7	8.1	—	—	3.4	4.5	6.4	9.1
3-1/2×1-1/4	101.6	42.2	203	5.7	8.1	—	—	3.6	4.9	6.4	9.7
3-1/2×1-1/2	101.6	48.3	203	5.7	8.1	—	—	3.7	5.1	7.1	10.2
3-1/2×2	101.6	60.3	203	5.7	8.1	—	—	3.9	5.5	8.7	11.1
3-1/2×2-1/2	101.6	73.0	203	5.7	8.1	—	—	5.2	7.0	9.5	14.0
3-1/2×3	101.6	88.9	203	5.7	8.1	—	—	5.5	7.6	11.1	15.2
4×1/4	114.3	13.7	229	6.0	8.6	13.5	17.1	2.2	3.0	—	—
4×3/8	114.3	17.1	229	6.0	8.6	13.5	17.1	2.3	3.2	—	—
4×1/2	114.3	21.3	229	6.0	8.6	13.5	17.1	2.8	3.7	4.8	7.5
4×3/4	114.3	26.7	229	6.0	8.6	13.5	17.1	2.9	3.9	5.6	7.8
4×1	114.3	33.4	229	6.0	8.6	13.5	17.1	3.4	4.5	6.4	9.1
4×1-1/4	114.3	42.2	229	6.0	8.6	13.5	17.1	3.6	4.9	6.4	9.7
4×1-1/2	114.3	48.3	229	6.0	8.6	13.5	17.1	3.7	5.1	7.1	10.2
4×2	114.3	60.3	229	6.0	8.6	13.5	17.1	3.9	5.5	8.7	11.1
4×2-1/2	114.3	73.0	229	6.0	8.6	13.5	17.1	5.2	7.0	9.5	14.0
4×3	114.3	88.9	229	6.0	8.6	13.5	17.1	5.5	7.6	11.1	15.2
4×3-1/2	114.3	101.6	229	6.0	8.6	13.5	17.1	5.7	8.1	—	—

1) Wall Thickness(T1,T2)in Accordance with ASME B36.10M.

PBE:PLAIN BOTH ENDS BBE:BEVEL BOTH ENDS TBE:THREAD BOTH ENDS
PSE:PLAIN SMALL END BSE:BEVEL SMALL END TSE:THREAD SMALL END
PLE:PLAIN LARGE END BLE:BEVEL LARGE END TLE:THREAD LARGE END

DIMENSIONAL TOLERANC ES OF SWAGED NIPPLES

MSS SP-95-2018

Unit:mm

Nominal Pipe Size (Inch)	Overall Length	Outside Diameter at End		Fitting Wall Thickness (see Note1)
		Square Cut Ends	Other End Connections	
1/8~3/8	±1.5	+0.4 -0.8	±0.8	Not less than 87.5% of Nominal Wall Thickness
1/2~1-1/2	±1.5	+0.4 -0.8	+1.5 -0.8	
2~2-1/2	±3.0	±0.8	+1.5 -0.8	
3~4	±3.0	±0.8	±1.5	

Note1:Prior to threading or grooving

Doc: OL, Rev: 0625

F&G Industries

PRECISION IN EVERY FIT

Product Catalog

THIS IS PART OF CRN

0A25318.25

Technical Standards and Safety Authority

Boilers and Pressure Vessels Safety Program

1980 Post Oak Blvd Ste 100

Houston, TX 77056

(832) 986-3307 | sales@fng-ind.com

www.fng-ind.com

Our Legacy, Our Future

F&G Industries stands as a symbol of excellence in forged fittings and flanges - built on over five decades of experience, innovation, and family dedication. Our journey began in 1967 with a focus on machining forged components, and over three generations, we've grown into a global manufacturing leader headquartered in Houston, Texas.

As a family-owned company, we merge traditional craftsmanship with cutting-edge technology. With in-house forging, CNC machining, heat treatment, and hot dip galvanization, we maintain full control over production - delivering precision, consistency, and performance in every product.

Today, F&G Industries is proud to serve the oil & gas and industrial sectors with fittings and flanges that meet the highest standards for quality and reliability.

Every Forge, Every Finish

We don’t just manufacture fittings; we craft performance through every stage of production. With a true end-to-end manufacturing approach, we maintain complete control from raw material to final inspection. This ensures exceptional consistency, precision, and reliability in every fitting we ship out.

By combining expert craftsmanship with advanced technology, we deliver products that meet the highest standards of quality. They are built to perform in the most demanding environments and backed by decades of experience.

On Time, Every Time

Our customers operate in industries where every second counts. That’s why F&G Industries guarantees exceptional lead times and seamless delivery. By managing every production step, we ensure your project stays on schedule, every time.

Reliability, Redefined

F&G Industries is redefining what reliability means in forged fittings. Engineered to exceed ISO and CE/PED standards, our fittings deliver enduring strength and performance, even in the most demanding environments. Quality isn’t just a promise; it’s our standard.

Comprehensive Product Line

- **ASME B16.11** Fittings
  - Size 1/8" - 4".
  - Class 2000, 3000, 6000 for threaded.
  - Class 3000, 6000, 9000 for socket welded.
- **MSS SP-83** Unions
  - Size 1/8" - 3".
  - Class 3000, 600 for threaded and socket welded.
- **MSS SP-95** Swage Nipples & Bull Plugs
  - Size 1/8" - 4".
  - Class STD, XS, SCH160, XXS.
- **MSS SP-97** Outlets
  - Size 1/8" - 4".
  - Class STD, XS, SCH160, XXS for buttwelding.
  - Class 3000, 6000, 9000 for threaded and socket welded.

BUTT WELD OUTLET



SIZE : 1/8 -36 **IDENTIFICATION** : STANDARD, X-STG, SCH.160, XX-STG

MATERIAL : ALL ASTM / ASME MATERIAL GRADES

PRODUCT CONFORMITY : MSS SP-97, ASME B16.25, ASME B31.1, ASME B31.3

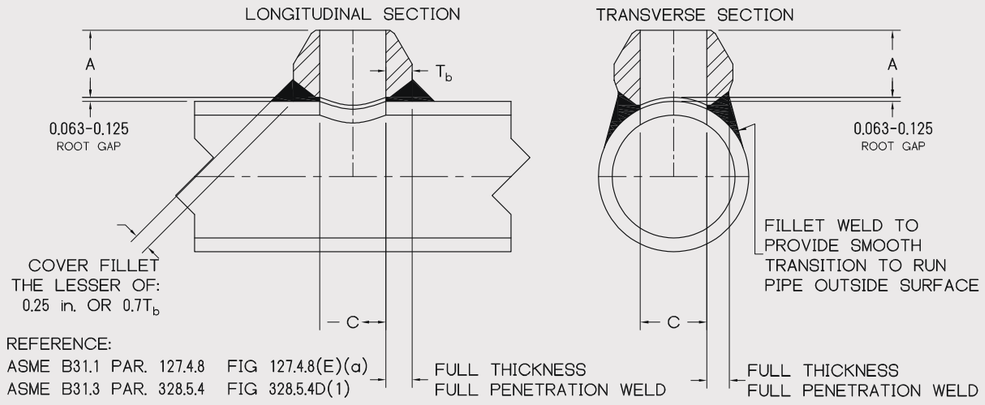

SIZES												
NPS	STANDARD			X-STG			SCH160			XX-STG		
	A	C	WT	A	C	WT	A	C	WT	A	C	WT
1/8	5/8	0.625	0.05	5/8	0.625	0.05	-	-	-	-	-	-
1/4	5/8	0.625	0.05	5/8	0.625	0.05	-	-	-	-	-	-
3/8	3/4	0.493	0.05	3/4	0.423	0.05	-	-	-	-	-	-
1/2	3/4	0.622	0.05	3/4	0.742	0.05	1-1/8	0.563	0.11	1-1/8	0.563	0.11
3/4	7/8	0.824	0.10	7/8	0.742	0.08	1-1/4	0.750	0.32	1-1/4	0.750	0.32
1	1-1/16	1.062	0.15	1-1/16	1.062	0.16	1-1/2	1.000	0.39	1-1/2	1.000	0.39
1-1/4	1-1/4	1.380	0.29	1-1/4	1.278	0.25	1-3/4	1.313	0.57	1-3/4	1.313	0.57
1-1/2	1-5/16	1.625	0.35	1-5/16	1.625	0.31	2	1.500	0.79	2	1.500	0.79
2	1-1/2	2.313	0.52	1-1/2	2.313	0.56	2-3/16	1.688	0.98	2-3/16	1.688	0.98
2-1/2	1-5/8	2.500	0.88	1-5/8	2.500	1.02	2-7/16	2.125	1.54	2-7/16	2.125	1.54
3	1-3/4	3.125	1.18	1-3/4	3.125	1.29	2-7/8	2.875	2.86	2-7/8	2.875	2.86
4	2	4.145	1.87	2	4.145	2.07	3-5/16	3.875	4.76	3-5/16	3.875	4.76

NOTES : 1. LARGER SIZES AND SPECIAL DIMENSIONS AVAILABLE
2. T_b AVAILABLE UPON REQUEST
3. WEIGHTS BASED ON CARBON STEEL

BUTT WELD OUTLET



SIZE : 1/8 -36 **IDENTIFICATION** : STANDARD, X-STG, SCH.160, XX-STG

MATERIAL : ALL ASTM / ASME MATERIAL GRADES

PRODUCT CONFORMITY : MSS SP-97, ASME B16.25, ASME B31.1, ASME B31.3

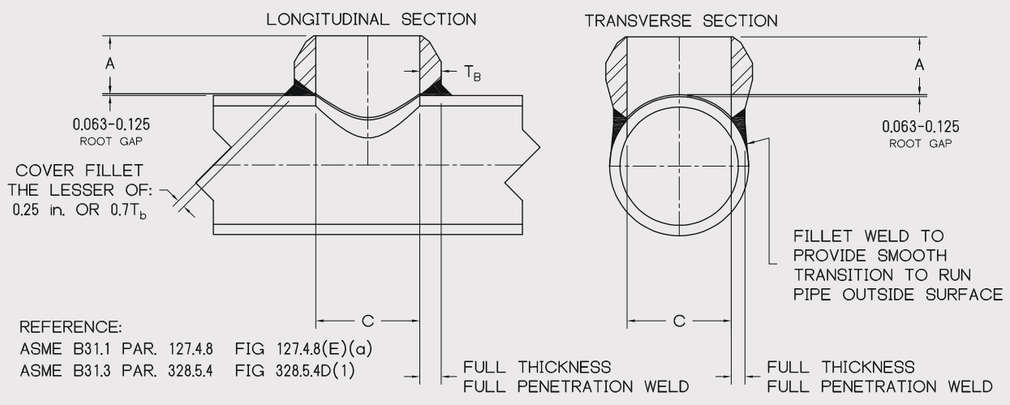

SIZES												
NPS	STANDARD			X-STG			SCH160			XX-STG		
	A	C	WT	A	C	WT	A	C	WT	A	C	WT
6	2-3/8	6.112	4.99	3-1/16	5.800	6.80	-	-	-	-	-	-
8	2-3/4	8.688	12.70	3-7/8	8.688	14.51	-	-	-	-	-	-
10	3-1/16	10.813	17.69	3-1/2	10.738	20.87	-	-	-	-	-	-
12	3-3/8	12.813	29.48	3-15/16	13.000	27.67	-	-	-	-	-	-
14	3-1/2	14.063	31.75	4-1/8	14.313	34.02	-	-	-	-	-	-
16	3-11/16	16.063	41.73	4-7/16	16.500	52.06	-	-	-	-	-	-
18	4-1/16	18.625	56.70	4-11/16	18.625	58.97	-	-	-	-	-	-
20	4-5/8	20.063	79.38	5	20.813	84.82	-	-	-	-	-	-
24	5-3/8	25.125	127.01	5-1/2	25.125	143.34	-	-	-	-	-	-

NOTES : 1. LARGER SIZES AND SPECIAL DIMENSIONS AVAILABLE
2. FOR FULL SIZE NPS 3 1/2, A = 2"
3. T_b AVAILABLE UPON REQUEST
4. WEIGHTS BASED ON CARBON STEEL

BUTT WELD OUTLET

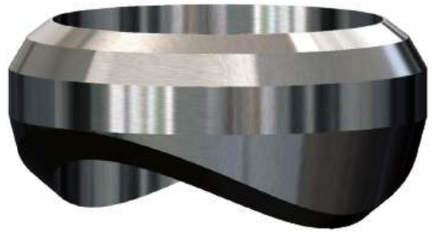

SIZE : 1/8 - 36 **IDENTIFICATION** : STANDARD, X-STG, SCH.160, XX-STG
MATERIAL : ALL ASTM / ASME MATERIAL GRADES
PRODUCT CONFORMITY : MSS SP-97, ASME B16.25, ASME B31.1, ASME B31.3

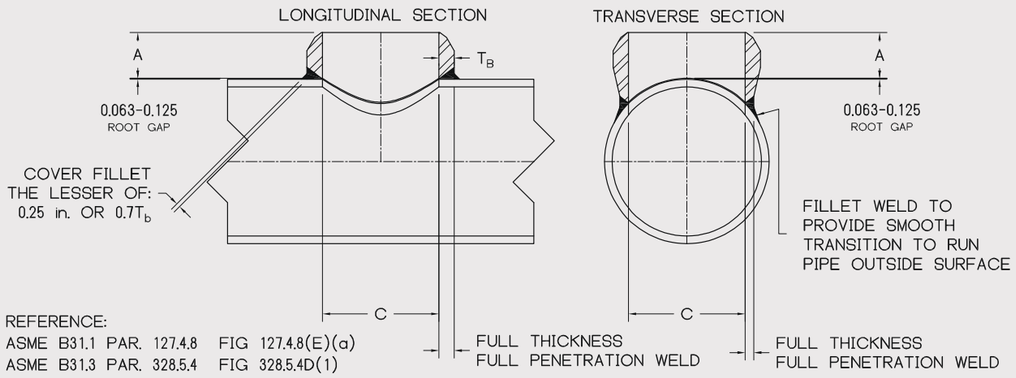

RUN SIZES												
Buttweld Standard	1/4	3/8	1/2	3/4	1	1-1/4	1-1/2	2	2-1/2	3	4	6
	1/4	3/8-	1/2-1	3/4-2	1	1-1/4	1-1/2	2	2-1/2	3	4	6
	3/8-36	3/4-36	1-1/4-36	2-1/2-36	1-1/4-1-	1-1/2-2	2-3-1/2	2-1/2-	3-4	3-1/2-	5-6	8
	-	-	-	-	2-36	2-1/2-6	4-36	3-1/2-	5-10	5-6	8-10	10
	-	-	-	-	-	8-36	-	8-36	12-36	8-14	12-20	12-14
	-	-	-	-	-	-	-	-	-	16-36	22-36	16-18
	-	-	-	-	-	-	-	-	-	-	-	20-24
	-	-	-	-	-	-	-	-	-	-	-	26-34
	-	-	-	-	-	-	-	-	-	-	-	36-42
Buttweld Extra Strong	1/4	3/8	1/2	3/4	1	1-1/4	1-1/2	2	2-1/2	3	4	6
	1/4-36	3/8	1/2-3/4	3/4-1-1/2	1	1-1/4-2	1-1/2	2	2-1/2	3	4	6
	-	1/2-36	1-36	2-36	1-1/4-1-	2-1/2-5	2-3-1/2	2-1/2-	3-4	3-1/2-	5-6	8
	-	-	-	-	2-36	6-36	4-36	3-1/2-	5-10	5-6	8-10	10
	-	-	-	-	-	-	-	8-36	12-36	8-14	12-20	12-14
	-	-	-	-	-	-	-	-	-	1-36	22-36	16-18
	-	-	-	-	-	-	-	-	-	-	-	20-24
	-	-	-	-	-	-	-	-	-	-	-	26-34
	-	-	-	-	-	-	-	-	-	-	-	36-42

NOTES : 1. LARGER SIZES AND SPECIAL DIMENSIONS AVAILABLE
2. FOR FULL SIZE NPS 10 X-STG, A = 3 1/2
3. FOR FULL SIZE NPS 12 X-STG, A = 3 15/16
4. FOR FULL SIZE NPS 14 X-STG, A = 4 1/8
5. FOR FULL SIZE NPS 16 X-STG, A = 4 7/16
6. FOR FULL SIZE NPS 18 STD A = 4 1/16 / X-STG A = 4 11/16
7. FOR FULL SIZE NPS 20 STD A = 4 5/8 / X-STG A = 5
8. FOR FULL SIZE NPS 24 STD, A = 5 3/8

HEAVY WALL BUTT WELD OUTLET

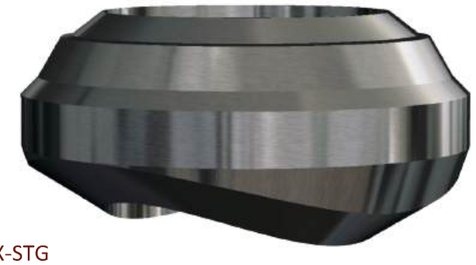

SIZE : 3 - 24 **IDENTIFICATION** : GREATER THAN X-STG
MATERIAL : ALL ASTM / ASME MATERIAL GRADES
PRODUCT CONFORMITY : MSS SP-97, ASME B16.25, ASME B31.1, ASME B31.3

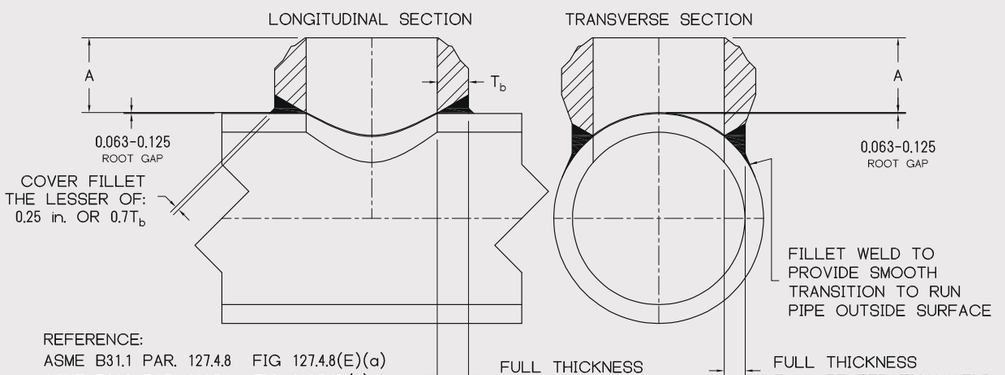

"A" DIMENSIONS BASED ON HEADER WALL THICKNESS										
NPS	**3/4**	**1**	**1 1/4**	**1 1/2**	**1 3/4**	**2**	**2 1/4**	**2 1/2**	**2 3/4**	**3**
3	2 7/8	3 1/4	3 3/8	3 5/8	4 1/8	4 9/16	5	5 1/2	5 7/8	6 1/16
3 1/2	3 1/8	3 1/4	3 7/16	3 3/4	4 3/16	4 5/8	5 1/16	5 9/16	6	6 5/16
4	3 5/16	3 3/8	3 1/2	3 7/8	4 5/16	4 3/4	5 3/16	5 5/8	6 1/8	6 9/16
5	3 3/4	3 3/4	4	4 1/4	4 3/4	5 1/4	5 3/4	6 1/4	6 5/8	7 3/16
6	4 1/8	4 3/8	4 1/2	4 11/16	5 1/4	5 3/4	6 1/4	6 3/4	7 1/4	7 13/16
8	4 3/16	4 5/8	4 7/8	5 3/16	5 3/4	6 3/8	6 15/16	7 1/2	8 1/8	8 11/16
10	4 1/4	4 7/8	5	5 5/16	5 15/16	6 9/16	7 3/16	7 13/16	8 7/16	9 1/16
12	4 3/8	5 1/8	5 3/8	5 11/16	6 5/16	6 15/16	7 9/16	8 3/16	8 13/16	9 7/16
14	4 1/2	5 1/4	5 1/2	5 13/16	6 5/16	6 15/16	7 9/16	8 3/16	8 13/16	9 7/16
16	4 11/16	5 7/8	6	6 7/16	6 5/8	7 1/4	7 7/8	8 1/2	9 1/8	9 3/4
18	5 1/8	6 1/2	6 1/2	6 1/2	6 13/16	7 7/16	8 1/4	8 13/16	9 7/16	10 1/16
20	5 5/8	6 3/4	7	7 9/16	7 13/16	8 1/8	8 11/16	9 1/4	9 15/16	10 3/8
24	6 1/2	7 5/8	8	8 3/4	9	9 13/16	10 1/2	11	12 9/16	10 11/16

THE CORRECT WAY TO READ THE HEAVY WALL CHART IS AS FOLLOWS, USING THE EXAMPLE 24 1.625 NW X 12 SCH.80BUTT-WELD OUTLET.THE RUN PIPE WALL THICKNESS IS GREATER THAN 1.5OO" AND LESS THAN 1.75O",THEREFORE,USE THE "A" DIMENSION FOR THE 12" BRANCH SIZE UNDER THE 1 3/4"RUN WALL THICKNESS COLUMN.THE "A"DIMENSION FOR THIS BWB IS 6 5/16".

NOTES:1.LARGER SIZES AND SPECIAL DIMENSIONS AVAILABLE

HEAVY WALL BUTT WELD OUTLET



SIZE : 3 - 24 **IDENTIFICATION** : GREATER THAN X-STG
MATERIAL : ALL ASTM / ASME MATERIAL GRADES
PRODUCT CONFORMITY : MSS SP-97, ASME B16.25, ASME B31.1, ASME B31.3

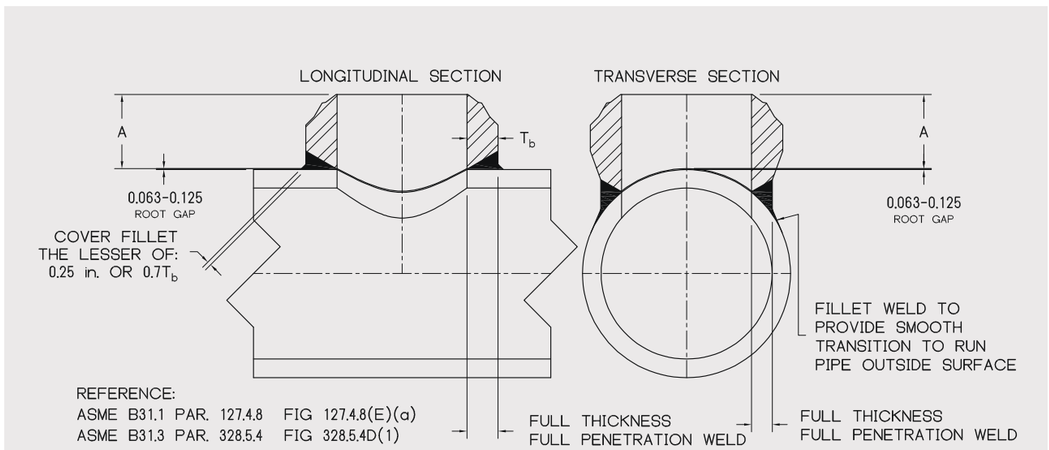

"A" DIMENSIONS BASED ON HEADER WALL THICKNESS										
NPS	**3/4**	**1**	**1 1/4**	**1 1/2**	**1 3/4**	**2**	**2 1/4**	**2 1/2**	**2 3/4**	**3**
3	2 7/8	3 1/4	3 3/8	3 5/8	4 1/8	4 9/16	5	5 1/2	5 7/8	6 1/16
3 1/2	3 1/8	3 1/4	3 7/16	3 3/4	4 3/16	4 5/8	5 1/16	5 9/16	6	6 5/16
4	3 5/16	3 3/8	3 1/2	3 7/8	4 5/16	4 3/4	5 3/16	5 5/8	6 1/8	6 9/16
5	3 3/4	3 3/4	4	4 1/4	4 3/4	5 1/4	5 3/4	6 1/4	6 5/8	7 3/16
6	4 1/8	4 3/8	4 1/2	4 11/16	5 1/4	5 3/4	6 1/4	6 3/4	7 1/4	7 13/16
8	4 3/16	4 5/8	4 7/8	5 3/16	5 3/4	6 3/8	6 15/16	7 1/2	8 1/8	8 11/16
10	4 1/4	4 7/8	5	5 5/16	5 15/16	6 9/16	7 3/16	7 13/16	8 7/16	9 1/16
12	4 3/8	5 1/8	5 3/8	5 11/16	6 5/16	6 15/16	7 9/16	8 3/16	8 13/16	9 7/16
14	4 1/2	5 1/4	5 1/2	5 13/16	6 5/16	6 15/16	7 9/16	8 3/16	8 13/16	9 7/16
16	4 11/16	5 7/8	6	6 7/16	6 5/8	7 1/4	7 7/8	8 1/2	9 1/8	9 3/4
18	5 1/8	6 1/2	6 1/2	6 1/2	6 13/16	7 7/16	8 1/4	8 13/16	9 7/16	10 1/16
20	5 5/8	6 3/4	7	7 9/16	7 13/16	8 1/8	8 11/16	9 1/4	9 15/16	10 3/8
24	6 1/2	7 5/8	8	8 3/4	9	9 13/16	10 1/2	11	12 9/16	10 11/16

THE CORRECT WAY TO READ THE HEAVY WALL CHART IS AS FOLLOWS, USING THE EXAMPLE 24 1.625 NW X 12 SCH.80BUTT-WELD OUTLET. THE RUN PIPE WALL THICKNESS IS GREATER THAN 1.500" AND LESS THAN 1.750",THEREFORE,USE THE "A" DIMENSION FOR THE 12" BRANCH SIZE UNDER THE 1 3/4" RUN WALL THICKNESS COLUMN.THE "A"DIMENSION FOR THIS BWB IS 6 5/16".

NOTES:1. LARGER SIZES AND SPECIAL DIMENSIONS AVAILABLE

BUTT WELD LATERALOUTLET

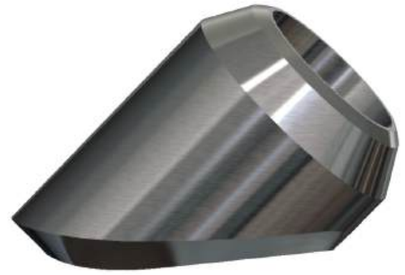

SIZE : 1/4 - 2 **IDENTIFICATION** : STANDARD, X-STG, SCH.160, XX-STG
MATERIAL : ALL ASTM / ASME MATERIAL GRADES
PRODUCT CONFORMITY : MSS SP-97, ASME B16.25, ASME B31.1, ASME B31.3

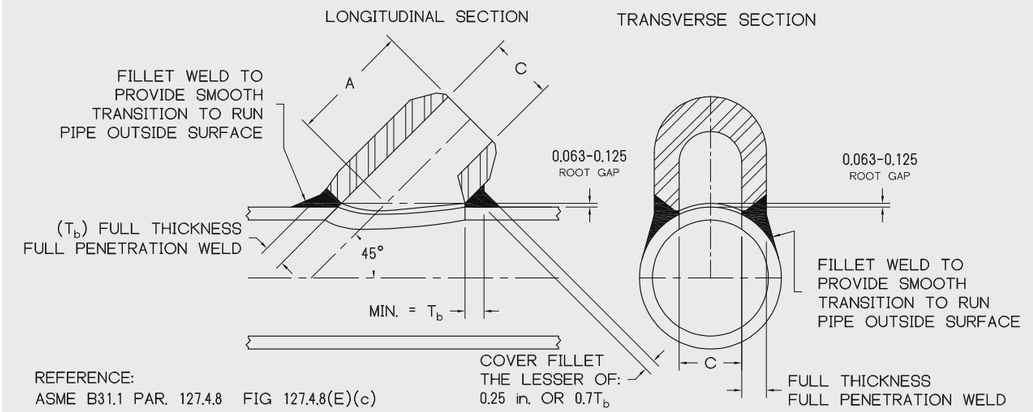

DIMENSIONS AND CONSOLIDATIONS												
NPS	STANDARD			X-STG			SCH.160			XX-STG		
	A	C	CONSOLIDATION	A	C	CONSOLIDATION	A	C	CONSOLIDATION	A	C	CONSOLIDATION
1/4	1 9/16	0.364	36 - 1/4	1 9/16	0.302	36 - 1/4						
3/8	1 9/16	0.493	36 - 3/8	1 9/16	0.423	36 - 3/8						
1/2	1 9/16	0.622	1/2 36 - 3/4	1 9/16	0.546	1/2 36 - 3/4	1 3/4	0.464	36 - 1/2	1 3/4	0.252	36 - 1/2
3/4	1 13/16	0.824	1 - 3/4 36 - 1 1/4	1 13/16	0.742	3/4 36 - 1	1 15/16	0.612	36 - 3/4	1 15/16	0.434	36 - 3/4
1	2 3/16	1.049	1 1 1/2 - 1 1/4 36 - 2	2 3/16	0.957	1 1/2 - 1 36 - 2	2 3/8	0.815	1 36 - 1 1/4	2 3/8	0.599	36 - 1
1 1/4	2 3/16	1.380	1 1/2 - 1 1/4 3 - 2 36 - 3 1/2	2 3/16	1.278	1 1/4 2 1/2 - 1 1/2 36 - 3	2 7/8	1.160	2 - 1 1/4 36 - 2 1/2	2 7/8	0.896	1 1/4 36 - 1 1/2
1 1/2	2 9/16	1.610	2 - 1 1/2 4 - 2 1/2 36 - 5	2 9/16	1.500	2 - 1 1/2 4 - 2 1/2 36 - 5	3 1/4	1.338	1 1/2 3 - 2 36 - 3 1/2	3 1/4	1.100	2 - 1 1/2 36 - 2 1/2
2	2 13/16	2.067	2 2 1/2 3 1/2 - 3 6 - 4 36 - 8	2 13/16	1.939	2 3 - 2 1/2 6 - 3 1/2 36 - 8	3 11/16	1.687	2 1/2 - 2 5 - 3 36 - 6	3 11/16	1.503	2 4 - 2 1/2 36 - 5

NOTES : 1. LARGER SIZES AND SPECIAL DIMENSIONS AVAILABLE 2. T_b AVAILABLE UPON REQUEST

BUTT WELD ELBOW OUTLET



SIZE : 1/4 - 2 **IDENTIFICATION** : STANDARD, X-STG, SCH.160, XX-STG
MATERIAL : ALL ASTM / ASME MATERIAL GRADES
PRODUCT CONFORMITY : MSS SP-97, ASME B16.25, ASME B31.1, ASME B31.3

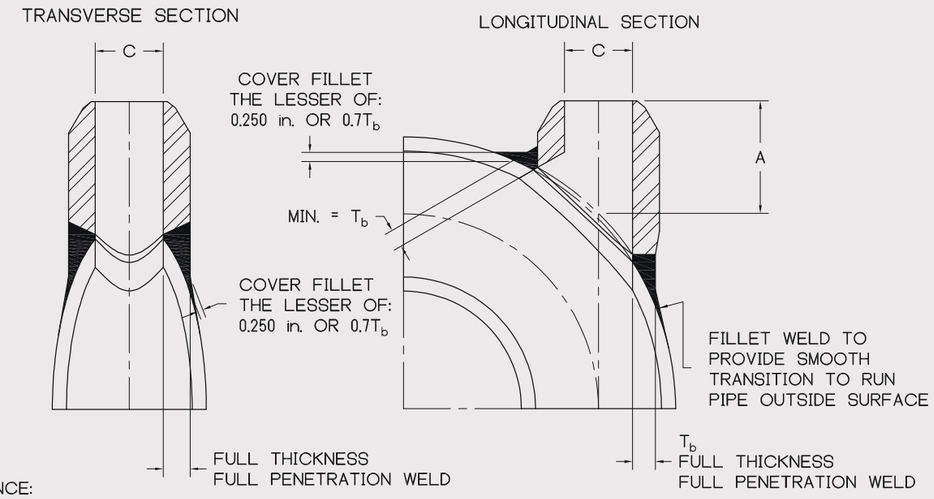

REFERENCE:
ASME B31.1 PAR. 127.4.8 FIG 127.4.8(E)(c)

COVER FILLET NOTE: The minimum cover weld throat thickness applies when the angle between the branch fitting groove weld face and the run pipe surface is less than 135 deg. For areas where the angle between the groove weld face and the run pipe surface is 135 deg or greater, the cover weld may transition to nothing. Cover fillet shall provide a smooth transition to run pipe.

DIMENSIONS AND CONSOLIDATIONS												
NPS	STANDARD			X-STG			SCH.160			XX-STG		
	A	C	CONSOLIDATION	A	C	CONSOLIDATION	A	C	CONSOLIDATION	A	C	CONSOLIDATION
1/2	1 3/16	0.622	36 - 3/4	1 3/16	0.546	36 - 3/4	1 9/16	0.464	36 - 3/4	1 9/16	0.252	36 - 3/4
3/4	1 3/8	0.824	36 - 1	1 3/8	0.742	36 - 1	1 3/4	0.612	36 - 1	1 3/4	0.434	36 - 1
1	1 11/16	1.049	36 - 2	1 11/16	0.957	36 - 2	2 1/8	0.815	36 - 2	2 1/8	0.599	36 - 2
1 1/4	2 1/16	1.380	36 - 2	2 1/16	1.278	36 - 2	2 9/16	1.160	36 - 2	2 9/16	0.896	36 - 2
1 1/2	2 1/4	1.610	36 - 2	2 1/4	1.500	36 - 2	3	1.338	36 - 2	3	1.100	36 - 2
2	2 5/8	2.067	36 - 3	2 5/8	1.939	36 - 3	3 5/16	1.687	36 - 3	3 5/16	1.503	36 - 3

NOTES : 1. LARGER SIZES AND SPECIAL DIMENSIONS AVAILABLE
2. T_b AVAILABLE UPON REQUEST

SOCKET WELD OUTLET

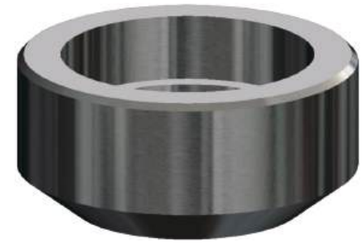

SIZE : 1/8 - 4 **CLASS** : 3000, 6000
MATERIAL : ALL ASTM / ASME MATERIAL GRADES
PRODUCT CONFORMITY : MSS SP-97, ASME B16.11, ASME B31.1, ASME B31.3

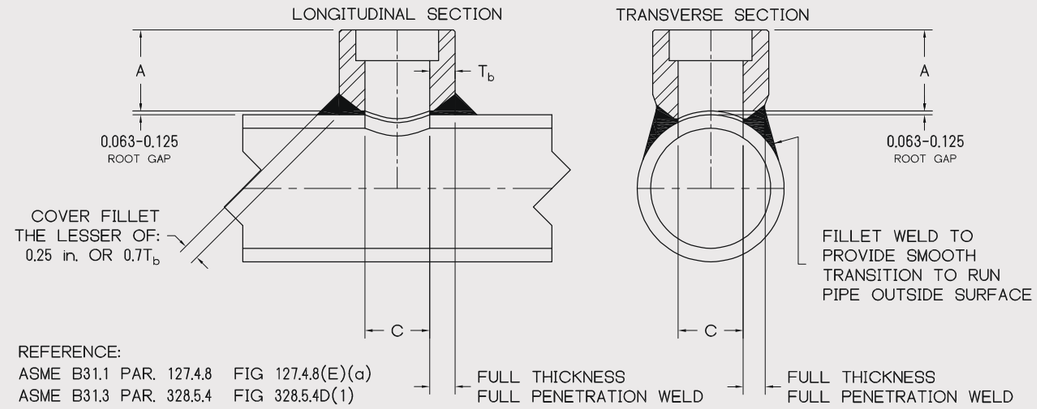

SIZES						
NPS	Class 3000			Class 6000		
	A	C	WT	A	C	WT
1/8	3/4	0.625	0.05	-	-	-
1/4	3/4	0.437	0.06	-	-	-
3/8	13/16	0.578	0.06	-	-	-
1/2	1	0.718	0.13	1-1/4	0.718	0.13
3/4	1-1/16	0.922	0.18	1-7/16	0.922	0.18
1	1-5/16	1.156	0.33	1-9/16	1.156	0.33
1-1/4	1-5/16	1.500	0.44	1-5/8	1.500	0.44
1-1/2	1-3/8	1.734	0.51	1-11/16	1.734	0.51
2	1-1/2	2.218	0.75	2-1/16	2.218	0.75
2-1/2	1-13/16	2.625	1.24	-	-	-
3	2	3.250	1.76	-	-	-
4	2-1/4	4.250	2.80	-	-	-

NOTES : 1. LARGER SIZES AND SPECIAL DIMENSIONS AVAILABLE
2. TYPICAL SOCKET DEPTH TOLERANCE: +.063 / - .000
3. T_b AVAILABLE UPON REQUEST
4. WEIGHTS BASED ON CARBON STEEL

SOCKET WELD OUTLET

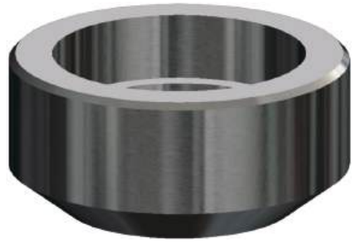

SIZE : 1/8 - 4 **CLASS** : 3000, 6000
MATERIAL : ALL ASTM / ASME MATERIAL GRADES
PRODUCT CONFORMITY : MSS SP-97, ASME B16.11, ASME B31.1, ASME B31.3

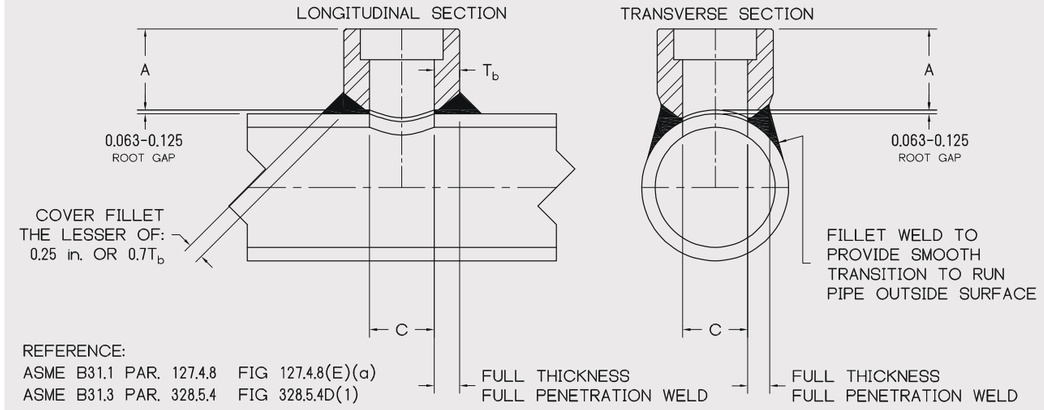

RUN SIZES											
Socket-Weld Class 3000	1/4	3/8	1/2	3/4	1	1-1/4	1-1/2	2	2-1/2	3	4
	1-4	3/8-1/2	1/2	3/4-1-1/4	1	1-1/4-1-1/2	1-1-2	2	2-1/2	3	4
	3/8-36	3/4-36	3/4-36	1-1/2-36	1-1/4-2-1/2	2-3-1/2	2-2-1/2	2-1/2-3-1/2	3-3-1/2	5-3-1/2	5-6
	-	-	-	-	3-36	4-36	3-5	4-6	4-6	6-14	8-10
	-	-	-	-	-	-	6-36	8-36	8-36	16-36	12-20
	-	-	-	-	-	-	-	-	-	-	22-36
Socket-Weld Class 6000	1/4	3/8	1/2	3/4	1	1-1/4	1-1/2	2	2-1/2	3	4
	1/4-36	3/8-36	1/2	3/4-1	1	1-1/4	1-1-2	2	2-1/2-3	3-3-1/2	4
	-	-	3/4-36	1-1/4-36	1-1/4-2-1/2	1-1/2-4	2-2-1/2	2-1/2-3-1/2	3-1/2-5	4-5	5
	-	-	-	-	3-36	5-36	3-5	4-6	6-18	6-10	6-8
	-	-	-	-	-	-	6-36	8-36	20-36	12-26	10-14
	-	-	-	-	-	-	-	-	-	28-36	16-36

NOTES : 1. LARGER SIZES AND SPECIAL DIMENSIONS AVAILABLE
2. TYPICAL SOCKET DEPTH TOLERANCE: +.063 / - .000
3. T_b AVAILABLE UPON REQUEST
4. WEIGHTS BASED ON CARBON STEEL

THREADED OUTLET



SIZE : 1/8 - 4 **CLASS** : 3000, 6000
MATERIAL : ALL ASTM / ASME MATERIAL GRADES
PRODUCT CONFORMITY : MSS SP-97, ASME B16.11, ASME B1.20.1 (NPT), ASME B31.1, ASME B31.3

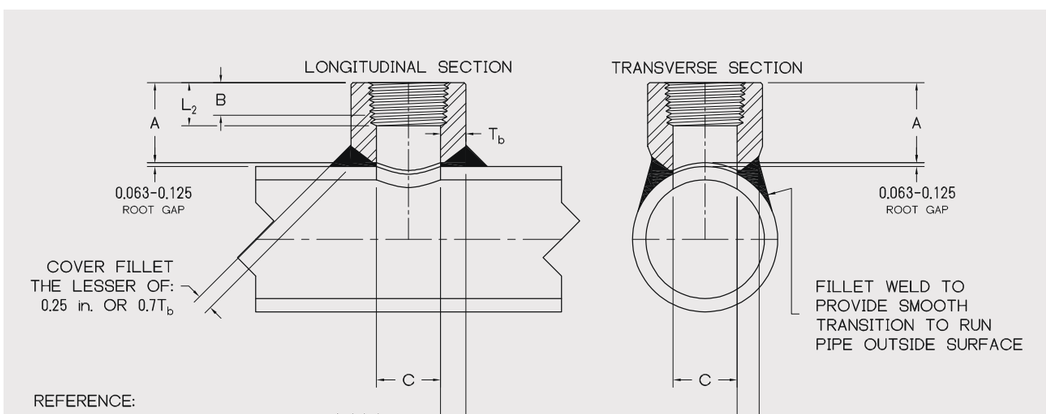

SIZES						
NPS	Class 3000			Class 6000		
	A	C	WT	A	C	WT
1/8	3/4	0.625	0.05	-	-	-
1/4	3/4	0.364	0.06	-	-	-
3/8	13/16	0.493	0.06	-	-	-
1/2	1	0.622	0.13	1-1/4	0.464	0.13
3/4	1-1/16	0.824	0.18	1-7/16	0.612	0.18
1	1-5/16	1.049	0.33	1-9/16	0.815	0.33
1-1/4	1-5/16	1.380	0.44	1-5/8	1.160	0.44
1-1/2	1-3/8	1.610	0.51	1-11/16	1.338	0.74
2	1-1/2	2.067	0.75	2-1/16	1.687	0.75
2-1/2	1-13/16	2.469	1.24	-	-	-
3	2	3.068	1.76	-	-	-
4	2-1/4	4.026	2.99	-	-	-

NOTES : 1. LARGER SIZES, SPECIAL DIMENSIONS AND SPECIAL THREADS AVAILABLE
2. DIMENSION B IS MINIMUM OF PERFECT THREAD. THE LENGTH OF USEFUL THREAD (B PLUS THREADS WITH FULLY FORMED ROOTS AND FLAT CRESTS) SHALL NOT BE LESS THAN L2 (EFFECTIVE LENGTH OF EXTERNAL THREADED) PER ASME B1.20.1
3. Tb AVAILABLE UPON REQUEST
4. WEIGHTS BASED ON CARBON STEEL

THREADED OUTLET



SIZE : 1/8 - 4 **CLASS** : 3000, 6000
MATERIAL : ALL ASTM / ASME MATERIAL GRADES
PRODUCT CONFORMITY : MSS SP-97, ASME B16.11, ASME B1.20.1 (NPT), ASME B31.1, ASME B31.3

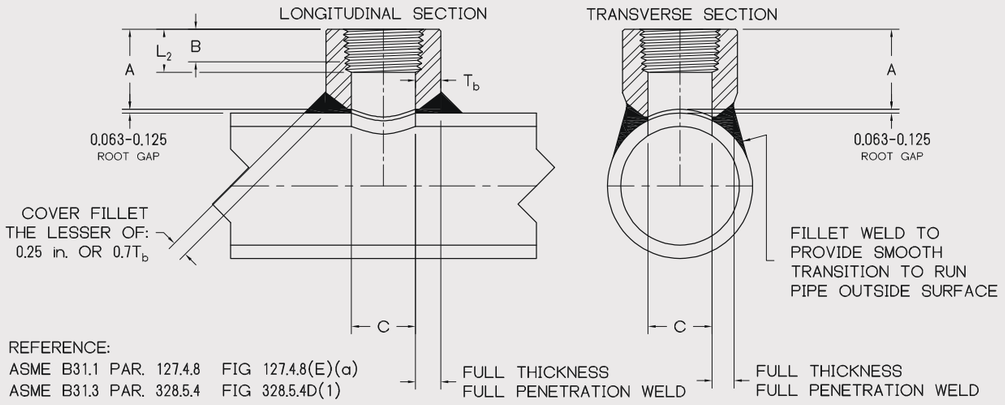

RUN SIZES												
Threaded Class 3000	1/4	3/8	1/2	3/4	1	1-1/4	1-1/2	2	2-1/2	3	4	-
	1/4-3/8	3/8-1	1/2	3/4-1-1/4	1	1-1/4-1-1/2	1-1/2	2	2-1/2	3	4	-
	1/2-36	1-1/4-36	3/4-36	1-1/2-36	1-1/4-2-1/2	2-3-1/2	2-2-1/2	2-1/2-3-1/2	3-3-1/2	3-1/2-5	5-6	-
	-	-	-	-	3-36	4-36	3-5	4-6	4-6	6-14	8-10	-
	-	-	-	-	-	-	6-36	8-36	8-36	16-36	12-20	-
	-	-	-	-	-	-	-	-	-	-	22-36	-
Threaded Class 6000	1/4	3/8	1/2	3/4	1	1-1/4	1-1/2	2	2-1/2	3	4	-
	1/4-3/8	3/8-1	1/2	3/4	1	1-1/4-1-1/2	1-1/2	2	2-1/2	3	4	-
	1/2-36	1-1/4-36	3/4-36	1-1-1/4	1-1/4-2-1/2	2-3-1/2	2-2-1/2	2-1/2-3-1/2	3-3-1/2	3-1/2	5	-
	-	-	-	1-1/2-36	3-36	4-8	3-5	4-6	4-5	4	6	-
	-	-	-	-	-	10-36	6-36	8-36	6-10	5-6	8-10	-
	-	-	-	-	-	-	-	-	12-26	8-12	12-18	-
	-	-	-	-	-	-	-	-	28-36	14-36	20-36	-

NOTES : 1. LARGER SIZES, SPECIAL DIMENSIONS AND SPECIAL THREADS AVAILABLE
2. DIMENSION B IS MINIMUM OF PERFECT THREAD. THE LENGTH OF USEFUL THREAD (B PLUS THREADS WITH FULLY FORMED ROOTS AND FLAT CRESTS) SHALL NOT BE LESS THAN L2 (EFFECTIVE LENGTH OF EXTERNAL THREADED) PER ASME B1.20.1
3. Tb AVAILABLE UPON REQUEST 4. WEIGHTS BASED ON CARBON STEEL

SOCKET WELD LATERAL OUTLET

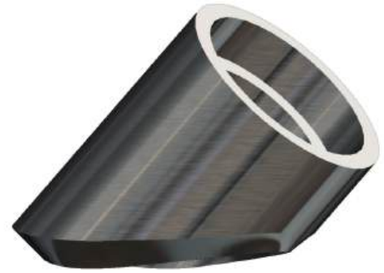

SIZE : 1/4 - 2 **IDENTIFICATION** : 3000, 6000, 9000
MATERIAL : ALL ASTM / ASME MATERIAL GRADES
PRODUCT CONFORMITY : MSS SP-97, ASME B16.11, ASME B31.1, ASME B31.3

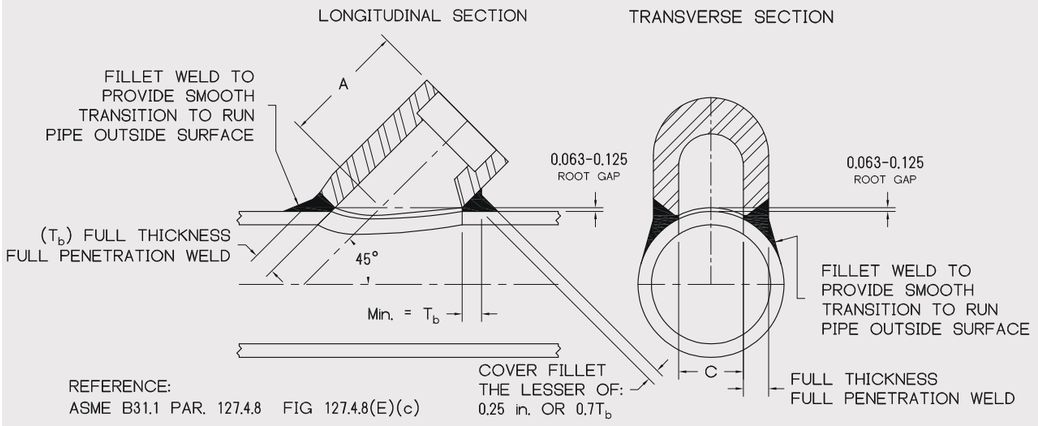

DIMENSIONS AND CONSOLIDATIONS											
NPS	SOCKET DEPTH	CL.3000 (3M) RUN PIPE CORRELATION: X-STG			CL.6000 (6M) RUN PIPE CORRELATION: SCH.160			CL.9000 (9M) RUN PIPE CORRELATION: XX-STG		
		A	C	CONSOLIDATION	A	C	CONSOLIDATION	A	C	CONSOLIDATION
1/4	**0.375**	1 9/16	0.364	36 - 1/4						
3/8	**0.375**	1 9/16	0.493	36 - 3/8						
1/2	**0.375**	1 9/16	0.622	1/2 36 - 3/4	1 7/8	0.464	36 - 1/2	1 7/8	0.252	36 - 1/2
3/4	**0.375**	1 7/8	0.824	1 - 3/4 36 - 1 1/4	2 3/16	0.612	36 - 3/4	2 3/16	0.434	36 - 3/4
1	**0.500**	2 3/16	1.049	1 1 1/2 - 1 1/4 36 - 2	2 1/2	0.815	1 36 - 1 1/4	2 1/2	0.599	36 - 1
1 1/4	**0.500**	2 1/2	1.380	1 1/2 - 1 1/4 3 - 2 36 - 3 1/2	2 5/8	1.160	2 - 1 1/4 36 - 2 1/2	2 5/8	0.896	1 1/4 36 - 1 1/2
1 1/2	**0.500**	2 9/16	1.610	2 - 1 1/2 4 - 2 1/2 36 - 5	3 1/8	1.338	1 1/2 3 - 2 36 - 3 1/2	3 1/8	1.100	2 - 1 1/2 36 - 2 1/2
2	**0.625**	3 1/16	2.067	2 2 1/2 3 1/2 - 3 6 - 4 36 - 8	3 1/8	1.687	2 1/2 - 2 5 - 3 36 - 6	3 1/8	1.503	2 4 - 2 1/2 36 - 5

NOTES : 1. LARGER SIZES AND SPECIAL DIMENSIONS AVAILABLE 2. T_b AVAILABLE UPON REQUEST
2. TYPICAL SOCKET DEPTH TOLERANCE: +.063 / - .000

THREADED LATERAL OUTLET



SIZE : 1/2 - 2 **CLASS** : 3000, 6000, 10000
MATERIAL : ALL ASTM / ASME MATERIAL GRADES
PRODUCT CONFORMITY : MSS SP-97, ASME B16.11, ASME B1.20.1 (NPT), B31.1, B31.3

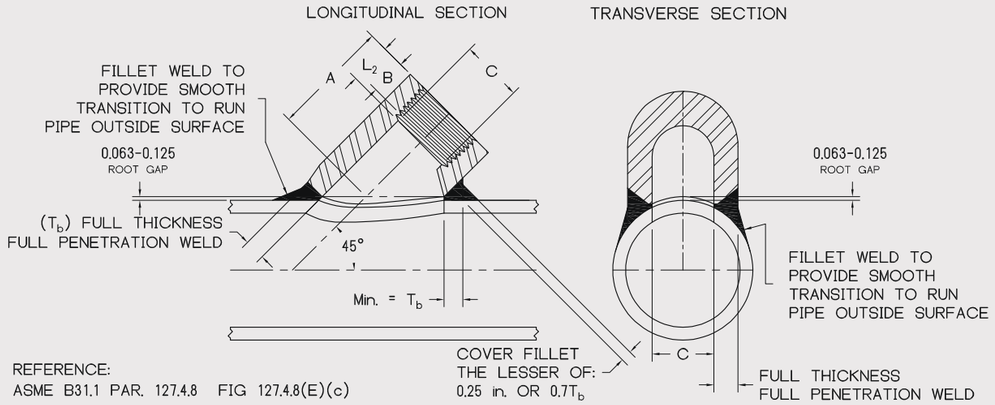

DIMENSIONS AND CONSOLIDATIONS											
NPS	SEE NOTE 2		CONSOLIDATION (ALL CLASSES)	CL.3000 (3M) RUN PIPE CORRELATION: X-STG			CL.6000 (6M) RUN PIPE CORRELATION: SCH.160			CL.10000 (10M) RUN PIPE CORRELATION: XX-STG		
	B	L_2		A	C	WT	A	C	WT	A	C	WT
1/2	0.43	0.5337	3/4 - 1/2 36 - 1	1.563	0.718	0.27	2	0.718	0.77	2.125	0.718	1.17
3/4	0.50	0.5457	3/4 1 1/4 - 1 36 - 1 1/2	1.875	0.922	0.42	2.313	0.922	1.14	2.563	0.922	2.35
1	0.58	0.6828	1 2 - 1 1/4 36 - 2 1/2	2.188	1.141	0.87	2.688	1.141	2.23	2.813	1.141	3.05
1 1/4	0.67	0.7068	1 1/4 2 - 1 1/2 4 - 2 1/2 36 - 5	2.500	1.500	1.61	2.875	1.500	2.63	3.125	1.500	4.68
1 1/2	0.70	0.7235	1 1/2 2 1/2 - 2 5 - 3 36 - 6	2.563	1.734	2.02	3.188	1.718	4.32	3.500	1.734	7.85
2	0.75	0.7565	2 2 1/2 3 4 - 3 1/2 8 - 5 36 - 10	3.063	2.219	2.97	3.875	2.188	7.37	4.188	2.219	12.39

NOTES : 1. LARGER SIZES, SPECIAL DIMENSIONS AND SPECIAL THREADS AVAILABLE
2. DIMENSION B IS MINIMUM OF PERFECT THREAD. THE LENGTH OF USEFUL THREAD (B PLUS THREADS WITH FULLY FORMED ROOTS AND FLAT CRESTS) SHALL NOT BE LESS THAN L2 (EFFECTIVE LENGTH OF EXTERNAL THREADED) PER ASME B1.20.1
3. Tb AVAILABLE UPON REQUEST

SOCKET WELD ELBOW OUTLET



SIZE : 1/4 - 2 **IDENTIFICATION** : 3000, 6000, 9000
MATERIAL : ALL ASTM / ASME MATERIAL GRADES
PRODUCT CONFORMITY : MSS SP-97, ASME B16.11, ASME B31.1, ASME B31.3

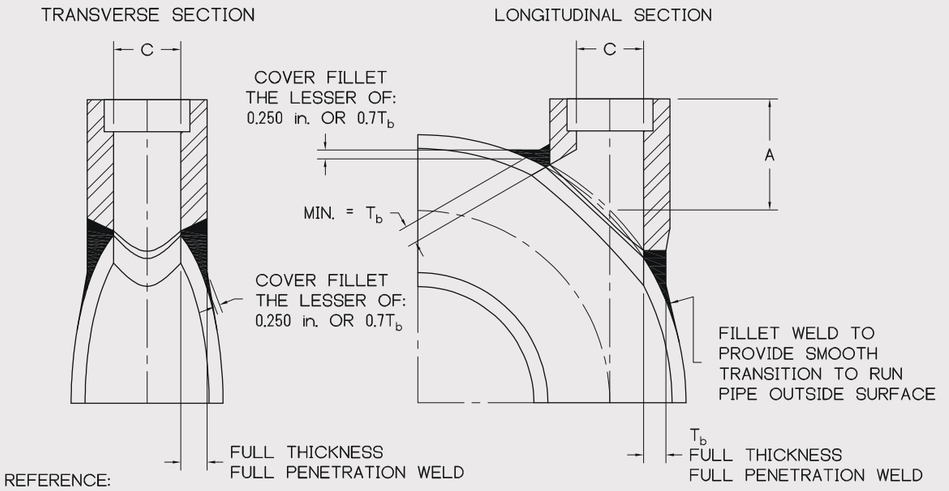

COVER FILLET NOTE: The minimum cover weld throat thickness applies when the angle between the branch fitting groove weld face and the run pipe surface is less than 135 deg. For areas where the angle between the groove weld face and the run pipe surface is 135 deg or greater, the cover weld may transition to nothing. Cover fillet shall provide a smooth transition to run pipe.

DIMENSIONS AND CONSOLIDATIONS										
NPS	SOCKET DEPTH	CL.3000 (3M) RUN PIPE CORRELATION: X-STG			CL.6000 (6M) RUN PIPE CORRELATION: SCH.160			CL.9000 (9M) RUN PIPE CORRELATION: XX-STG		
		A	C	CONSOLIDATION	A	C	CONSOLIDATION	A	C	CONSOLIDATION
1/4	**0.375**	1.188	0.364							
3/8	**0.375**	1.375	0.493							
1/2	**0.375**	1.563	0.622	36 - 3/4	1.938	0.464	36 - 3/4	2.063	0.252	36 - 3/4
3/4	**0.375**	1.875	0.824	36 - 1	2.313	0.612	36 - 1	2.375	0.434	36 - 1
1	**0.500**	2.188	1.049	36 - 2	2.563	0.815	36 - 2	2.688	0.599	36 - 2
1 1/4	**0.500**	2.500	1.380	36 - 2	2.813	1.160	36 - 2	3.000	0.896	36 - 2
1 1/2	**0.500**	2.625	1.610	36 - 2	3.188	1.338	36 - 2	3.188	1.100	36 - 2
2	**0.625**	3.063	2.067	36 - 3	3.688	1.687	36 - 3	3.813	1.503	36 - 3

NOTES : 1. LARGER SIZES AND SPECIAL DIMENSIONS AVAILABLE
2. T_b AVAILABLE UPON REQUEST
3. TYPICAL SOCKET DEPTH TOLERANCE: +.063 / - .000

THREADED ELBOW OUTLET

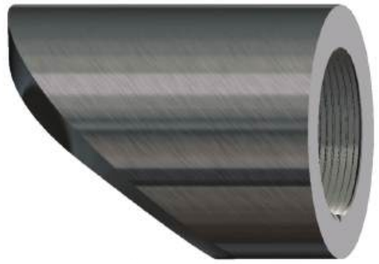

SIZE : 1/4 - 2 **CLASS** : 3000, 6000, 10000
MATERIAL : ALL ASTM / ASME MATERIAL GRADES
PRODUCT CONFORMITY : MSS SP-97, ASME B16.11, ASME B1.20.1 (NPT), B31.1, B31.3

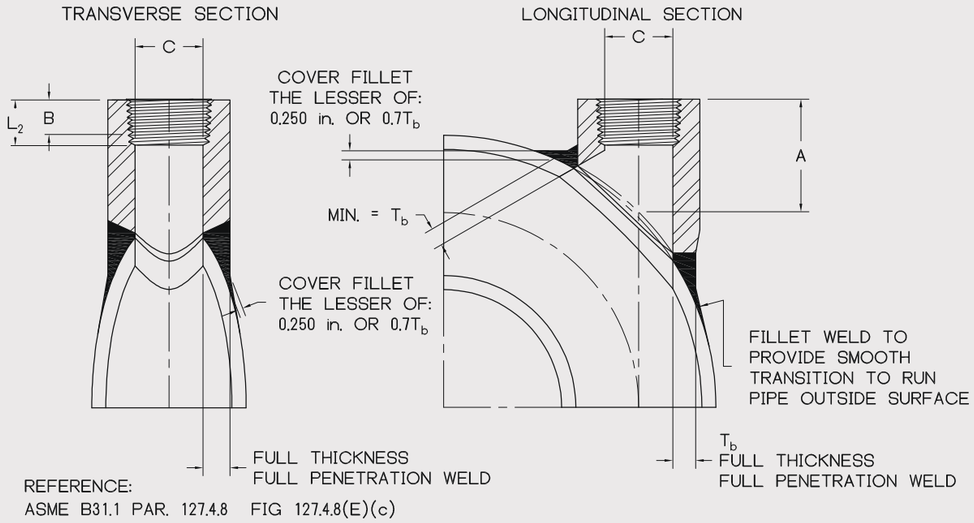

REFERENCE:
ASME B31.1 PAR. 127.4.8 FIG 127.4.8(E)(c)

COVER FILLET NOTE: The minimum cover weld throat thickness applies when the angle between the branch fitting groove weld face and the run pipe surface is less than 135 deg. For areas where the angle between the groove weld face and the run pipe surface is 135 deg or greater, the cover weld may transition to nothing. Cover fillet shall provide a smooth transition to run pipe.

DIMENSIONS AND CONSOLIDATIONS												
NPS	SEE NOTE 2		CONSOLIDATION (ALL CLASSES)	CL.3000 (3M) RUN PIPE CORRELATION: X-STG			CL.6000 (6M) RUN PIPE CORRELATION: SCH.160			CL.10000 (10M) RUN PIPE CORRELATION: XX-STG		
	B	L_2		A	C	WT	A	C	WT	A	C	WT
1/4	0.32	0.4018	36 - 3/4	1.125	0.437	0.15	1.563	0.437	0.28	1.625	0.437	0.49
3/8	0.36	0.4078	36 - 3/4	1.25	0.578	0.18	1.625	0.578	0.43	1.688	0.578	0.69
1/2	0.43	0.5337	36 - 3/4	1.375	0.718	0.28	1.750	0.718	0.78	1.750	0.718	0.99
3/4	0.50	0.5457	36 - 1	1.563	0.922	0.43	2.000	0.922	1.13	2.063	0.922	1.95
1	0.58	0.6828	36 - 2	1.938	1.141	0.84	2.250	1.141	2.06	2.313	1.141	2.59
1 1/4	0.67	0.7068	36 - 2	2.125	1.500	1.54	2.500	1.500	2.50	2.625	1.500	4.05
1 1/2	0.70	0.7235	36 - 2	2.313	1.734	1.98	2.750	1.734	4.16	2.938	1.734	6.7
2	0.75	0.7565	36 - 3	2.688	2.219	3.03	3.375	2.219	7.31	3.500	2.219	10.69

NOTES : 1. LARGER SIZES, SPECIAL DIMENSIONS AND SPECIAL THREADS AVAILABLE
2. DIMENSION B IS MINIMUM OF PERFECT THREAD. THE LENGTH OF USEFUL THREAD (B PLUS THREADS WITH FULLY FORMED ROOTS AND FLAT CRESTS) SHALL NOT BE LESS THAN L2 (EFFECTIVE LENGTH OF EXTERNAL THREADED) PER ASME B1.20.1
3. Tb AVAILABLE UPON REQUEST

NIPPLE OUTLET



SIZE : 1/2 - 4 **IDENTIFICATION** : X-STG, SCH.160, AND XX-STG
MATERIAL : ALL ASTM / ASME MATERIAL GRADES
PRODUCT CONFORMITY : MSS SP-97, ASME B1.20.1 (NPT) B31.1, B31.3

THE NIPPLE OUTLET IS AVAILABLE WITH PLAIN END, THREADED END, BEVELED END, OR GROOVED END IN ALL GRADES OF MATERIALS. STANDARD HEIGHTS ARE 3-1/2",4-1/2",5-1/2",AND 6-1/2" AND ARE AVAILABLE IN ALL END CONDITIONS. OTHER HEIGHTS ARE AVAILABLE UPON REQUEST. THREADED ENDS HAVE MALE NPT THREADS IN ACCORDANCE WITH ASME B1.2O.1. BEVELED ENDS ARE IN ACCORDANCE WITH ASME B16.25.NIPPLE OUTLET MEET THE REQUIREMENTS OF ASME B31.3 FOR INTEGRALLY REINFORCED BRANCH CONNECTIONS.

ELIMINATE
2-PIECE CONSTRUCTION
1 MATERIAL TEST REPORTS
1 WELDS - 1 NDT INSPECTIONS (WHEN REQUIRED)
COSTLY FIT UP AND FABRICATION TIME
WELD PROTRUSION IN BORE AT WELD POINTS

ADVANTAGES
1-PIECE CONSTRUCTION
1 MATERIAL TEST REPORT
1 WELD - 1 NDT INSPECTION (WHEN REQUIRED)
REDUCED FIT UP AND FABRICATION TIME
SMOOTH SEAMLESS BORE PROVIDES BETTER FLOW

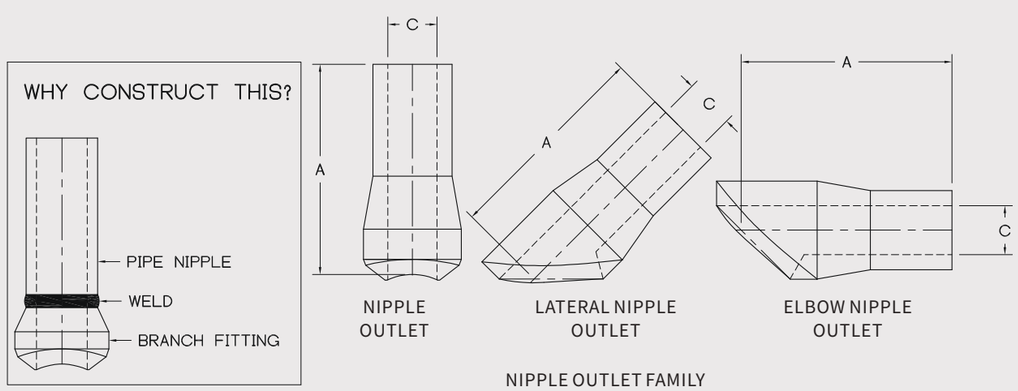

NIPPLE OUTLET FAMILY

DIMENSIONS AND WEIGHTS										
NPS	STANDARD HEIGHTS "A"				BORE "C"			WT 90°FITTING 3 1/2 LG		
					X-STG	SCH.160	XX-STG	XSTG	SCH.160	XX-STG
1/2	3 1/2	4 1/2	5 1/2	6 1/2	0.546	0.464	0.252	0.68	0.73	0.83
3/4	3 1/2	4 1/2	5 1/2	6 1/2	0.742	0.612	0.434	0.77	0.89	1.01
1	3 1/2	4 1/2	5 1/2	6 1/2	0.957	0.815	0.599	0.85	1.03	1.23
1 1/4	3 1/2	4 1/2	5 1/2	6 1/2	1.278	1.160	0.896	1.63	1.82	2.16
1 1/2	3 1/2	4 1/2	5 1/2	6 1/2	1.500	1.338	1.100	1.92	2.22	2.58
2	3 1/2	4 1/2	5 1/2	6 1/2	1.939	1.687	1.503	2.44	3.04	3.40

NOTES: SPECIAL DIMENSIONS AVAILABLE BY REQUEST

FLANGED OUTLET



SIZE : 1/2 - 4 **IDENTIFICATION** : CL.150 THROUGH CL.2500
MATERIAL : ALL ASTM / ASME MATERIAL GRADES
PRODUCT CONFORMITY : MSS SP-97, ASME B16.5, B31.1, B31.3

THE FLANGED OUTLET IS AVAILABLE WITH ANY STANDARD FACING AND WITH ANY SPECIFIED BORE. SPECIAL FACINGS MACHINED TO YOUR REQUIREMENTS CAN ALSO BE ACCOMMODATED. THE FLANGED OUTLET IS IDEAL FOR MULTIPLE MANIFOLD OUTLETS WHERE CONSISTENT FLANGE FACE HEIGHT IS REQUIRED. FLANGE DIMENSIONS AND TOLERANCES ARE IN ACCORDANCE WITH ASME B16.5.

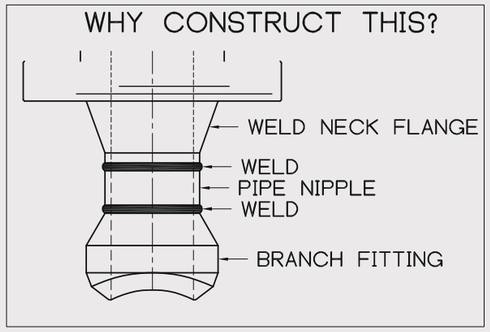

ELIMINATE
*3-PIECE CONSTRUCTION
*2 MATERIAL TEST REPORTS
*2 WELDS - 2 NDT INSPECTIONS (WHEN REQUIRED)
*COSTLY FIT UP AND FABRICATION TIME
*WELD PROTRUSION IN BORE AT WELD POINTS
*INCONSISTENT FLANGE FACE HEIGHT

ADVANTAGES
*1-PIECE CONSTRUCTION
*1 MATERIAL TEST REPORT
*1 WELD - 1 NDT INSPECTION (WHEN REQUIRED)
*REDUCED FIT UP AND FABRICATION TIME
*CONSISTENT FLANGE FACE HEIGHT
*SMOOTH SEAMLESS BORE PROVIDES BETTER FLOW

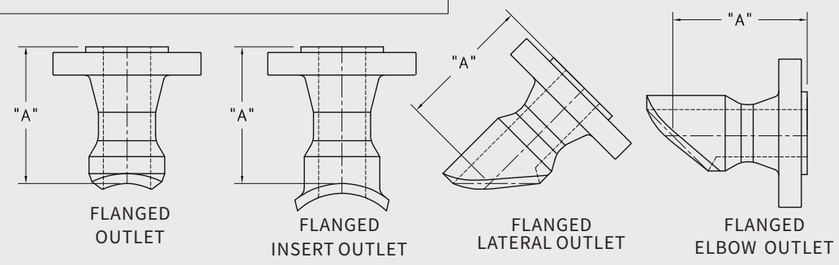

FLANGED OUTLET FAMILY

CL.150		CL.300		CL.400/600		CL.900/1500		CL.2500	
NPS	A	NPS	A	NPS	A	NPS	A	NPS	A
1/2	6	1/2	6	1/2	6	1/2	6*	1/2	6*
3/4	6	3/4	6	3/4	6	3/4	6*	3/4	6*
1	6	1	6	1	6	1	6*	1	6*
1 1/4	6	1 1/4	6	1 1/4	6	1 1/4	6*	1 1/4	6*
1 1/2	6	1 1/2	6	1 1/2	6	1 1/2	6*	1 1/2	9
2	6	2	6	2	6	2	9	2	9

NOTES: CL.1500 AND 2500 FLANGED LATERAL AND ELBOW OUTLET, A = 9.
SPECIAL DIMENSIONS AVAILABLE BY REQUEST
UNLESS SPECIFIED OTHERWISE, FLANGE DIMESIONS ARE IN ACC. WITH ASME B16.5, LATEST EDITION

SPECIALTY NOZZLES

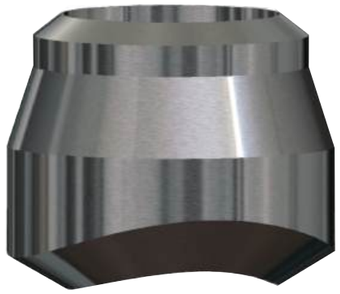

BUTT WELD NOZZLES ARE MOST COMMONLY PRODUCED IN CHARTED WALL THICKNESSES / SCHEDULES. THEY ARE AVAILABLE IN ANY COMBINATION OF OD AND WALL THICKNESS IMAGINABLE. WE WILL MANUFACTURE TO YOUR SPECIFIED DIMENSIONS.

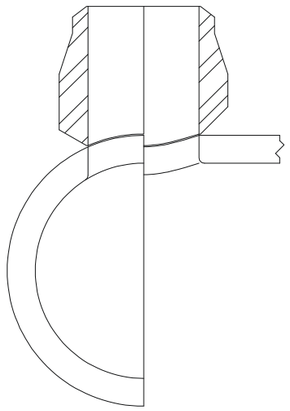



NOZZLES CAN BE MANUFACTURED AS FLAT OR CONTOURED FOR EITHER A SET-ON OR SET-IN APPLICATION. THE CONTOUR RADIUS WILL MATCH THE RADIUS OF EITHER THE OUTER DIAMETER OR INNER DIAMETER OF THE HEADER VESSEL.

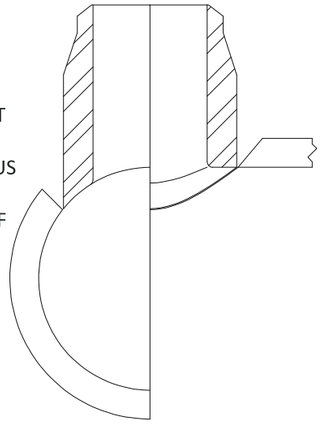



NOZZLES CAN BE MANUFACTURED WITH A FLANGE FACING TO MATCH ASME OR API REQUIREMENTS. INSERT NOZZLES CAN ALSO BE PROVIDED WITH AN INSERT OR “Q” STYLE LIP.

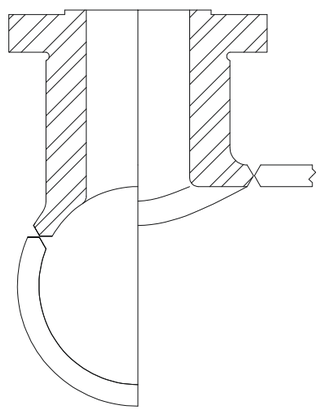

COUPLETS AND WELD BOSSES



SIZE : 1/2 - 2 **CLASS :** 3000, 6000, 9000
MATERIAL : ALL ASTM / ASME MATERIAL GRADES
PRODUCT CONFORMITY : ASME B16.11, ASME B31.1, ASME B31.3

SOCKET-WELD
COUPLET BOSS (SWCB)

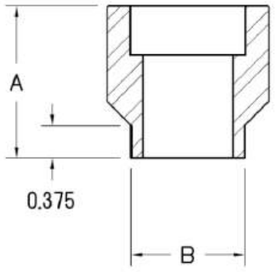

THREADED
COUPLET BOSS (THCB)

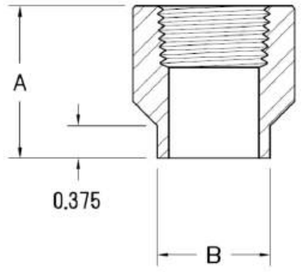

COMBINATION
COUPLET BOSS (CBCB)

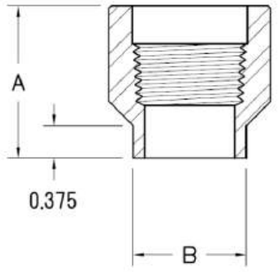

COUPLETS AND WELD BOSSES BASIC DIMENSIONS							
CLASS 3000 & 6000		0.5	0.7	1	1.25	1.5	2
A	SOCKET	1.313	1.375	1.688	1.875	2.000	2.250
	THREADED	1.313	1.375	1.688	1.875	2.000	2.250
	COMBINATION	1.688	1.875	2.188	2.375	2.500	2.875
B	SOCKET	0.938	1.063	1.313	1.688	1.938	2.438
	THREADED	0.938	1.063	1.313	1.688	1.938	2.438
	COMBINATION	0.938	1.063	1.313	1.688	1.938	2.438
C	SOCKET	1.250	1.438	1.625	1.688	1.750	2.250
	THREADED	0.938	1.000	1.188	1.313	1.563	1.688
	COMBINATION	1.313	1.500	1.688	1.813	2.063	1.313

SOCKET-WELD
WELD BOSS (SWWB)

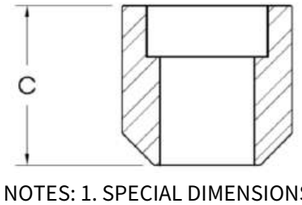

THREADED
WELD BOSS (THWB)

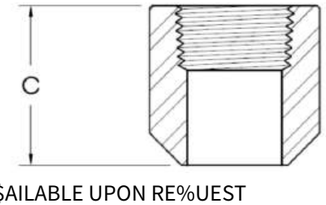

COMBINATION
WELD BOSS (CBWB)

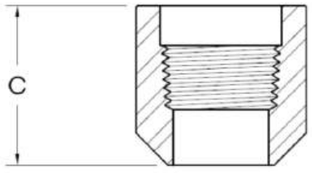

NOTES: 1. SPECIAL DIMENSIONS A$AILABLE UPON RE%UEST

AVIATION FUEL PIPING INSERT OUTLET



SIZE:1/2-2
IDENTIFICATION: SCH.10s, SCH.40s, SCH.80s, CL.150, CL.300,CL.3000
MATERIAL:A105,F304/F316/L
PRODUCT CONFORMITY: MSS SP-97,ASME B16.11,ASME B1.20.1(NPT),ASME B31.1,ASME B31.3
AVIATION FUEL INSERT OUTLET ARE DESIGNED SPECIFICALLY FOR AVIATION FUEL PIPING WHERE A FULLY INTERPRETABLE X-RAY IS REQUIRED AT THE OUTLET-TO-HEADER WELD. THE AVIATION INSERT OUTLET IS DESIGNED AND CONTOURED TO PROVIDE A FLUSH FIT WITH THE RUN PIPE 0.D.AND I.D. IN MOST APPLICATIONS, THE AVIATION INSERT OUTLET IS ROUND, FACILITATING THE USE OF AUTOMATIC CIRCLE BURNING AND WELDING EQUIPMENT.

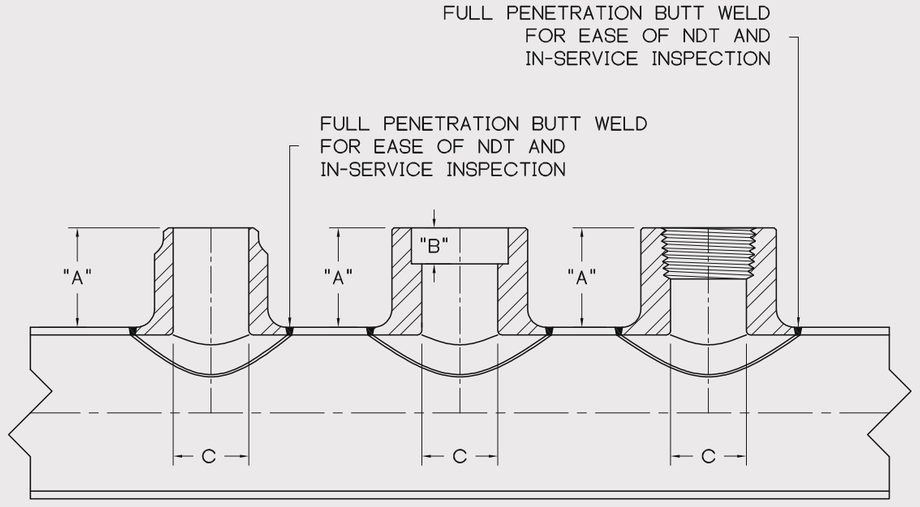

AVIATION FUEL PIPING BUTT WELD INSERT OUTLET

AVIATION FUEL PIPING SOCKET WELD INSERT OUTLET

AVIATION FUEL PIPING THREADED INSERT OUTLET

BASIC DIMENSIONS AND CONSOLIDATIONS										
NPS	STD BUTT WELD			3M SOCKET WELD				3M THREADED		
	A	C	HEADER RANGE	A	B	C	HEADER RANGE	A	C	HEADER RANGE
1/2	1.250	0.622	≥ NPS 1	0.938	0.375	0.622	≥ NPS 1	1.000	0.703	≥ NPS 1
3/4	1.250	0.824	≥ NPS 1 1/4	1.063	0.500	0.824	≥ NPS 1 1/4	1.063	0.906	≥ NPS 1 1/4
1	1.250	1.049	≥ NPS 1 1/2	1.313	0.500	1.049	≥ NPS 1 1/2	1.313	1.141	≥ NPS 1 1/2
1 1/4	1.250	1.380	≥ NPS 2	1.313	0.500	1.380	≥ NPS 2	1.313	1.484	≥ NPS 2
1 1/2	1.500	1.610	≥ NPS 2 1/2	1.375	0.500	1.610	≥ NPS 2 1/2	1.375	1.719	≥ NPS 2 1/2
2	1.750	2.067	≥ NPS 3	1.500	0.625	2.067	≥ NPS 3	1.500	2.188	≥ NPS 3

NOTES : 1. LARGER SIZES AND SPECIAL DIMENSIONS AVAILABLE

LOW WELD VOLUME LATERAL OUTLET



SIZE : 1/2 - 2 IDENTIFICATION: SCH.10s, SCH.40s CL.3000

MATERIAL : STAINLESS F304L & F316L

PRODUCT CONFORMITY : MSS SP-97, ASME B16.11, ASME B1.20.1 (NPT), ASME B31.1, ASME B31.3

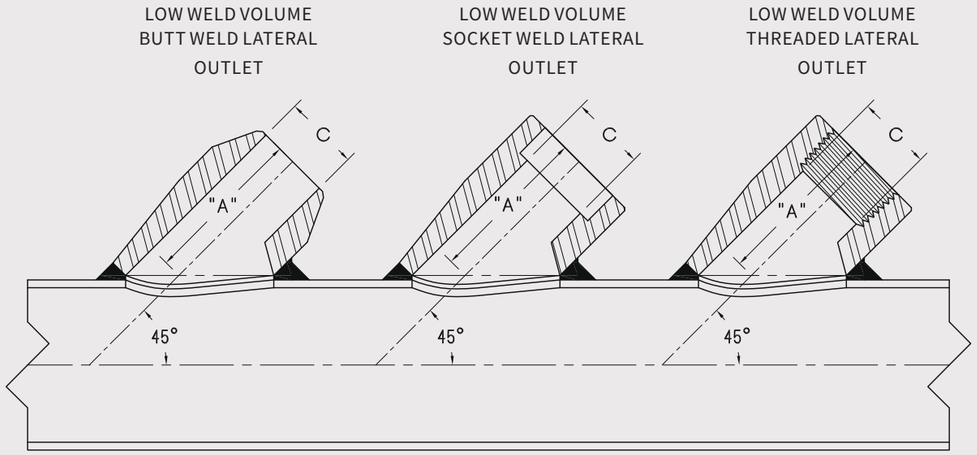

REFERENCE:
ASME B31.1 PAR. 127.4.8 FIG 127.4.8(E)(c)

BASIC DIMENSIONS AND CONSOLIDATIONS										
NPS	SCH.10s BUTT WELD			SOCKET WELD				THREADED		
	A	C	CONSOLIDATION	A	B	C	CONSOLIDATION	A	C	CONSOLIDATION
1/2	1.563	0.674	1/2 36 - 3/4	1.563	0.375	0.622	1/2 36 - 3/4	1.563	0.703	3/4 - 1/2 36 - 1
3/4	1.813	0.884	1 1/4 - 3/4 36 - 1 1/2	1.875	0.500	0.824	1 - 3/4 36 - 1 1/4	1.872	0.906	3/4 1 1/4 - 1 36 - 1 1/2
1	2.188	1.097	1 2 - 1 1/4 36 - 2 1/2	2.188	0.500	1.049	1 1 1/2 - 1 1/4 36 - 2	2.188	1.141	1 2 - 1 1/4 36 - 2 1/2
1 1/4	2.188	1.442	1 1/2 - 1 1/4 3 1/2 - 2 36 - 4	2.500	0.500	1.380	1 1/2 - 1 1/4 3 - 2 36 - 3 1/2	2.500	1.484	1 1/4 2 - 1 1/2 4 - 2 1/2 36 - 5
1 1/2	2.563	1.682	1 1/2 2 1/2 - 2 5 - 3 36 - 6	2.563	0.500	1.610	2 - 1 1/2 4 - 2 1/2 36 - 5	2.563	1.719	1 1/2 2 1 /2 - 2 5 - 3 36 - 6
2	2.938	2.157	2 2 1/2 4 - 3 8 - 5 36 - 10	3.063	0.625	2.067	2 2 1/2 3 1/2 - 3 6 - 4 36 - 8	3.063	2.188	2 2 1/2 3 4 - 3 1/2 8 - 5 36 - 10

NOTES : 1. LARGER SIZES AND SPECIAL DIMENSIONS AVAILABLE

LOW WELD VOLUME ELBOW OUTLET



SIZE : 1/2 - 2 IDENTIFICATION: SCH.10s, SCH.40s CL.3000

MATERIAL : STAINLESS F304L & F316L

PRODUCT CONFORMITY : MSS SP-97, ASME B16.11, ASME B1.20.1 (NPT), ASME B31.1, ASME B31.3

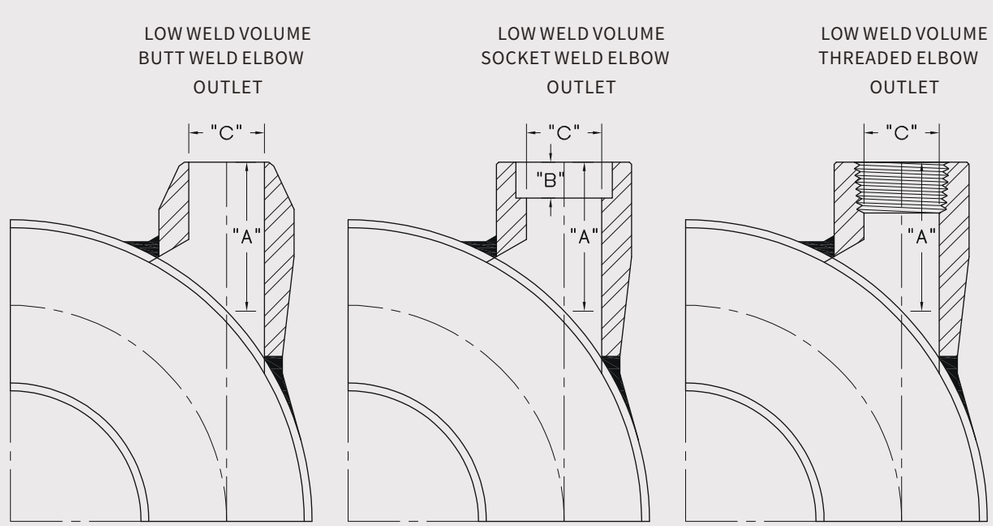

WELDING REFERENCE:
ASME B31.1 PAR. 127.4.8 FIG 127.4.8(E)(b)

BASIC DIMENSIONS AND CONSOLIDATIONS										
NPS	SCH.10s BUTT WELD			SOCKET WELD				THREADED		
	A	C	CONSOLIDATION	A	B	C	CONSOLIDATION	A	C	CONSOLIDATION
1/2	1.188	0.674	36 - 3/4	1.563	0.375	0.622	36 - 3/4	1.375	0.703	36 - 3/4
3/4	1.375	0.884	36 - 1	1.875	0.500	0.824	36 - 1	1.563	0.906	36 - 1
1	1.688	1.097	36 - 2	2.188	0.500	1.049	36 - 2	1.938	1.141	36 - 2
1 1/4	2.063	1.442	36 - 2	2.500	0.500	1.380	36 - 2	2.125	1.484	36 - 2
1 1/2	2.250	1.682	36 - 2	2.563	0.500	1.610	36 - 2	2.313	1.719	36 - 2
2	2.625	2.157	36 - 3	3.063	0.625	2.067	36 - 3	2.688	2.188	36 - 3

NOTES : 1. LARGER SIZES AND SPECIAL DIMENSIONS AVAILABLE

HEAVY WALL FITTNGS AND SPECIALTY ITEMS



SEAMLESS BUTT WELD CROSS
DIMENSIONS: ASME B16.9
STYLES: STRAIGHT, REDUCING, CUSHION
SIZES: 1/2" THROUGH 24"
MATERIALS: ALL MATERIAL GRADES



SEAMLESS BUTT WELD TEE
DIMENSIONS: ASME B16.9
STYLE: STRAIGHT, REDUCING, BULL, CUSHION
SIZES: 1/2" THROUGH 24"
MATERIALS: ALL MATERIAL GRADES



SEAMLESS BUTT WELD WYE
STYLES: STRAIGHT, REDUCING, ECCENTRIC
SIZES: 1/2" THROUGH 24"
MATERIALS: ALL MATERIAL GRADES



SEAMLESS BUTT WELD LATERAL
STYLES: STRAIGHT, REDUCING, ECCENTRIC
SIZES: 1/2" THROUGH 24"
MATERIALS: ALL MATERIAL GRADES



SEAMLESS REDUCERS
DIMENSIONS: ASME B16.9
STYLES: CONCENTRIC, ECCENTRIC,
EXTREME REDUCTIONS, HEAVY WALLS
MATERIALS: ALL MATERIAL GRADES



SWAGE NIPPLES
DIMENSIONS: MSS SP-25
STYLES: CONCENTRIC, ECCENTRIC,
EXTREME REDUCTIONS, HEAVY WALLS
MATERIALS: ALL MATERIAL GRADES



SEAMLESS TRANSITION PIECES
STYLES: CONCENTRIC, ECCENTRIC,
EXTREME REDUCTIONS, HEAVY WALLS
MATERIALS: ALL MATERIAL GRADES



THERMOWELLS & SAMPLING NOZZLES
STYLES: SINGLE WELL, DOUBLE WELL,
STAGGERED ID, ANGULAR OFFSET OR STEPPED ID
MATERIALS: ALL MATERIAL GRADES

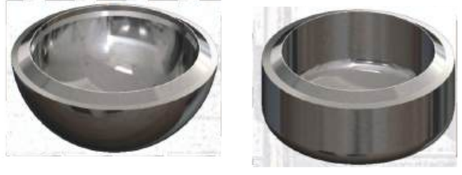

BUTT WELD CAP & HEMISPHERICAL HEADS
DIMENSIONS: ASME B16.9 & SECTION VIII-1
STYLES: UNCHARTED SIZES & HEAVY WALLS
MATERIALS: ALL MATERIAL GRADES

BLEED RINGS



SIZE : 1 - 24 **IDENTIFICATION** : CL.150 THROUGH CL.2500
MATERIAL : ALL ASTM / ASME MATERIAL GRADES
PRODUCT CONFORMITY : ASME B16.5

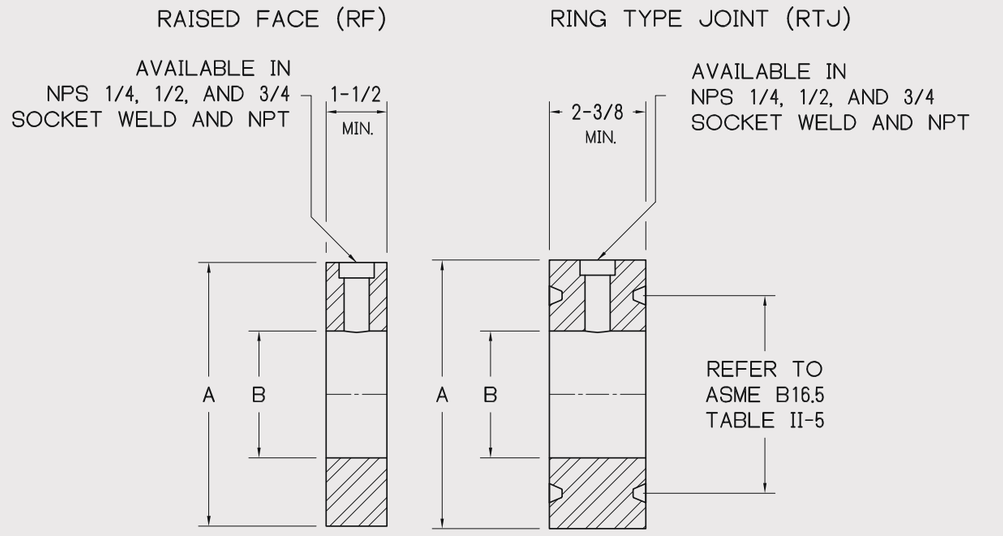

BASIC DIMENSIONS											
NPS	B	RAISED FACE "A" DIMENSION					RING TYPE JOINT "A" DIMENSION				
		CL.150	CL.300	CL.600	CL.900	CL.1500	CL.150	CL.300	CL.600	CL.900	CL.1500
1	1 1/8	2 1/2	2 3/4	2 3/4	3	3	2 1/2	2 3/4	2 3/4	2 13/16	2 13/16
1 1/2	1 5/8	3 1/4	3 5/8	3 5/8	3 3/4	3 3/4	3 1/4	3 9/16	3 9/16	3 5/8	3 5/8
2	2 1/8	4	4 1/4	4 1/4	5 1/2	5 1/2	4	4 1/4	4 1/4	4 7/8	4 7/8
2 1/2	2 1/2	4 3/4	5	5	6 3/8	6 3/8	4 3/4	5	5	5 3/8	5 3/8
3	3 1/8	5 1/4	5 3/4	5 3/4	6 1/2	6 3/4	5 1/4	5 3/4	5 3/4	6 5/8	6 5/8
4	4 1/8	6 3/4	7	7 1/2	8	8 1/8	6 3/4	6 7/8	6 7/8	7 5/8	7 5/8
6	6 1/8	8 5/8	9 3/4	10 3/8	11 1/4	11	8 5/8	9 1/2	9 1/2	9 1/2	9 3/4

NOTES: SPECIAL DIMENSIONS AVAILABLE
MULTIPLE TAPS AVAILABLE AND SPECIAL ORIENTATIONS AVAILABLE
LARGER TAPS AVAILABLE, HOWEVER RING THICKNESS MAY NEED TO BE INCREASED ACCORDINGLY

STUDDING OUTLETS



SIZE : 1/2 - 24 **IDENTIFICATION** : CL.150 THROUGH CL.2500

MATERIAL : ALL ASTM / ASME MATERIAL GRADES

PRODUCT CONFORMITY : ASME B16.5

STUDDING OUTLETS ARE AVAILABLE IN SIZES 1/2 THROUGH 24" FROM CL.150 TO 2500. THEY CAN BE PROVIDED AS FLAT OR CONTOURED TO FIT THE OD OR ID OF SHELLS, HEADS, OR CONES. OFFSETS FROM VESSEL / HEAD CENTERLINES CAN ALSO BE ACCOMMODATED. SPECIAL MACHINING FOR SIGHT GLASS ASSEMBLIES IN ACCORDANCE WITH YOUR SPECIFIED DIMENSIONS CAN BE ACCOMMIDATED. WE CAN ALSO PROVIDE AIR TEST HOLES UPON REQUEST.

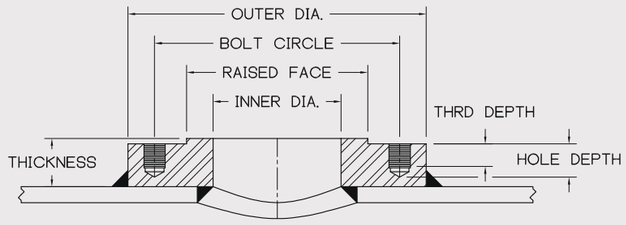

WELD PROFILE IN ACC. WITH ASME VIII-1 FIG. UW-16.1(p).
STUD HOLES SHOWN OUT OF TRUE POSITION. STUD HOLES WILL STRADDLE CENTERLINE

CLASS 150										
NPS (Inner Dia.)	Flange Thickness	Outer Diameter	Raised Face	Bolt Circle	No. of Holes	Hole Size	Hole Depth	STUD BOLT		
								Thrd Size	T.P.I.	Thrd Depth
1/2	1.250	3.500	1.375	2.375	4	27/64	0.875	1/2	13	0.563
3/4	1.250	3.875	1.688	2.750	4	27/64	0.875	1/2	13	0.563
1	1.250	4.250	2.000	3.125	4	27/64	0.875	1/2	13	0.563
1 1/4	1.250	4.625	2.500	3.500	4	27/64	0.875	1/2	13	0.563
1 1/2	1.250	5.000	2.875	3.875	4	27/64	0.875	1/2	13	0.563
2	1.500	6.000	3.625	4.750	4	17/32	1.125	5/8	11	0.750
2 1/2	1.500	7.000	4.125	5.500	4	17/32	1.125	5/8	11	0.750
3	1.500	7.500	5.000	6.000	4	17/32	1.125	5/8	11	0.750
3 1/2	1.500	8.500	5.500	7.000	8	17/32	1.125	5/8	11	0.750
4	1.500	9.000	6.188	7.500	8	17/32	1.125	5/8	11	0.750
5	1.750	10.000	7.313	8.500	8	21/32	1.313	3/4	10	0.875
6	1.750	11.000	8.500	9.500	8	21/32	1.313	3/4	10	0.875
8	1.750	13.500	10.625	11.750	8	21/32	1.313	3/4	10	0.875
10	1.813	16.000	12.750	14.250	12	49/64	1.438	7/8	9	1.000
12	1.813	19.000	15.000	17.000	12	49/64	1.438	7/8	9	1.000

CLASS 300										
NPS (Inner Dia.)	Flange Thickness	Outer Diameter	Raised Face	Bolt Circle	No. of Holes	Hole Size	Hole Depth	STUD BOLT		
								Thrd Size	T.P.I.	Thrd Depth
1/2	1.250	3.750	1.375	2.625	4	27/64	0.875	1/2	13	0.563
3/4	1.500	4.625	1.688	3.250	4	17/32	1.125	5/8	11	0.750
1	1.500	4.875	2.000	3.500	4	17/32	1.125	5/8	11	0.750
1 1/4	1.500	5.250	2.500	3.875	4	17/32	1.125	5/8	11	0.750
1 1/2	1.750	6.125	2.875	4.500	4	21/32	1.313	3/4	10	0.875
2	1.500	6.500	3.625	5.000	8	17/32	1.125	5/8	11	0.750
2 1/2	1.750	7.500	4.125	5.875	8	21/32	1.313	3/4	10	0.875
3	1.750	8.250	5.000	6.625	8	21/32	1.313	3/4	10	0.875
3 1/2	1.750	9.000	5.500	7.250	8	21/32	1.313	3/4	10	0.875
4	1.750	10.000	6.188	7.875	8	21/32	1.313	3/4	10	0.875
5	1.750	11.000	7.313	9.250	8	21/32	1.313	3/4	10	0.875
6	1.750	12.500	8.500	10.625	12	21/32	1.313	3/4	10	0.875
8	1.875	15.000	10.625	13.000	12	49/64	1.438	7/8	9	1.000
10	2.125	17.500	12.750	15.250	16	7/8	1.563	1	8	1.125
12	2.250	20.500	15.000	17.750	16	1	1.813	1 1/8	8	1.250

CLASS 600										
NPS (Inner Dia.)	Flange Thickness	Outer Diameter	Raised Face	Bolt Circle	No. of Holes	Hole Size	Hole Depth	STUD BOLT		
								Thrd Size	T.P.I.	Thrd Depth
1/2	1.500	3.750	1.375	2.625	4	27/64	0.875	1/2	13	0.563
3/4	1.750	4.625	1.688	3.250	4	17/32	1.125	5/8	11	0.750
1	1.750	4.875	2.000	3.500	4	17/32	1.125	5/8	11	0.750
1 1/4	1.750	5.250	2.500	3.875	4	17/32	1.125	5/8	11	0.750
1 1/2	1.938	6.125	2.875	4.500	4	21/32	1.313	3/4	10	0.875
2	1.750	6.500	3.625	5.000	8	17/32	1.125	5/8	11	0.750
2 1/2	2.000	7.500	4.125	5.875	8	21/32	1.313	3/4	10	0.875
3	2.000	8.250	5.000	6.625	8	21/32	1.313	3/4	10	0.875
3 1/2	2.125	9.000	5.500	7.250	8	49/64	1.438	7/8	9	1.000
4	2.125	10.750	6.188	8.500	8	49/64	1.438	7/8	9	1.000
5	2.250	13.000	7.313	10.500	8	7/8	1.563	1	8	1.125
6	2.250	14.000	8.500	11.500	12	7/8	1.563	1	8	1.125
8	2.500	16.500	10.625	13.750	12	1	1.813	1 1/8	8	1.250
10	2.750	20.000	12.750	17.000	16	1 1/8	2.125	1 1/4	8	1.438
12	2.750	22.000	15.000	19.250	20	1 1/8	2.125	1 1/4	8	1.438

CLASS 900										
NPS (Inner Dia.)	Flange Thickness	Outer Diameter	Raised Face	Bolt Circle	No. of Holes	Hole Size	Hole Depth	STUD BOLT		
								Thrd Size	T.P.I.	Thrd Depth
1/2	2.000	4.750	1.375	3.250	4	21/32	1.313	3/4	10	0.875
3/4	2.000	5.125	1.688	3.500	4	21/32	1.313	3/4	10	0.875
1	2.125	5.875	2.000	4.000	4	49/64	1.438	7/8	9	1.000
1 1/4	2.125	6.250	2.500	4.375	4	49/64	1.438	7/8	9	1.000
1 1/2	2.250	7.000	2.875	4.875	4	7/8	1.563	1	8	1.125
2	2.125	8.500	3.625	6.500	8	49/64	1.438	7/8	9	1.000
2 1/2	2.250	9.625	4.125	7.500	8	7/8	1.563	1	8	1.125
3	2.125	9.500	5.000	7.500	8	49/64	1.438	7/8	9	1.000
4	2.500	11.500	6.188	9.250	8	1	1.813	1 1/8	8	1.250
5	2.750	13.750	7.313	11.000	8	1 1/8	2.125	1 1/4	8	1.438
6	2.500	15.000	8.500	12.500	12	1	1.813	1 1/8	8	1.250
8	3.000	18.500	10.625	15.500	12	1 1/4	2.250	1 3/8	8	1.563
10	3.000	21.500	12.750	18.500	16	1 1/4	2.250	1 3/8	8	1.563
12	3.000	24.000	15.000	21.000	20	1 1/4	2.250	1 3/8	8	1.563

CLASS 1500										
NPS (Inner Dia.)	Flange Thickness	Outer Diameter	Raised Face	Bolt Circle	No. of Holes	Hole Size	Hole Depth	STUD BOLT		
								Thrd Size	T.P.I.	Thrd Depth
1/2	2.000	4.750	1.375	3.250	4	21/32	1.313	3/4	10	0.875
3/4	2.000	5.125	1.688	3.500	4	21/32	1.313	3/4	10	0.875
1	2.125	5.875	2.000	4.000	4	49/64	1.438	7/8	9	1.000
1 1/4	2.125	6.250	2.500	4.375	4	49/64	1.438	7/8	9	1.000
1 1/2	2.250	7.000	2.875	4.875	4	7/8	1.563	1	8	1.125
2	2.125	8.500	3.625	6.500	8	49/64	1.438	7/8	9	1.000
2 1/2	2.250	9.625	4.125	7.500	8	7/8	1.563	1	8	1.125
3	2.500	10.500	5.000	8.000	8	1	1.813	1 1/8	8	1.250
4	2.750	12.250	6.188	9.500	8	1 1/8	2.125	1 1/4	8	1.438
5	3.125	14.750	7.313	11.500	8	1 3/8	2.375	1 1/2	8	1.688
6	3.000	15.500	8.500	12.500	12	1 1/4	2.250	1 3/8	8	1.563
8	3.500	19.000	10.625	15.500	12	1 1/2	2.563	1 5/8	8	1.875
10	3.875	23.000	12.750	19.000	12	1 3/4	3.000	1 7/8	8	2.125
12	4.125	26.500	15.000	22.500	16	1 7/8	3.313	2	8	2.250

CLASS 2500										
NPS (Inner Dia.)	Flange Thickness	Outer Diameter	Raised Face	Bolt Circle	No. of Holes	Hole Size	Hole Depth	STUD BOLT		
								Thrd Size	T.P.I.	Thrd Depth
1/2	2.000	5.250	1.375	3.500	4	21/32	1.313	3/4	10	0.875
3/4	2.000	5.500	1.688	3.750	4	21/32	1.313	3/4	10	0.875
1	2.125	6.250	2.000	4.250	4	49/64	1.438	7/8	9	1.000
1 1/4	2.250	7.250	2.500	5.125	4	7/8	1.563	1	8	1.125
1 1/2	2.500	8.000	2.875	5.750	4	1	1.813	1 1/8	8	1.250
2	2.250	9.250	3.625	6.750	8	7/8	1.563	1	8	1.125
2 1/2	2.500	10.500	4.125	7.750	8	1	1.813	1 1/8	8	1.250
3	2.750	12.000	5.000	9.000	8	1 1/8	2.125	1 1/4	8	1.438
4	3.250	14.000	6.188	10.750	8	1 3/8	2.375	1 1/2	8	1.688
5	3.750	16.500	7.313	12.750	8	1 5/8	2.813	1 3/4	8	2.000
6	4.125	19.000	8.500	14.500	8	1 7/8	3.313	2	8	2.250
8	4.375	21.750	10.625	17.250	12	1 7/8	3.313	2	8	2.250
10	5.125	26.500	12.750	21.250	12	2 3/8	4.000	2 1/2	8	2.813
12	5.500	30.000	15.000	24.375	12	2 5/8	4.375	2 3/4	8	3.125

VARIOUS STUDDING OUTLET CONFIGURATIONS

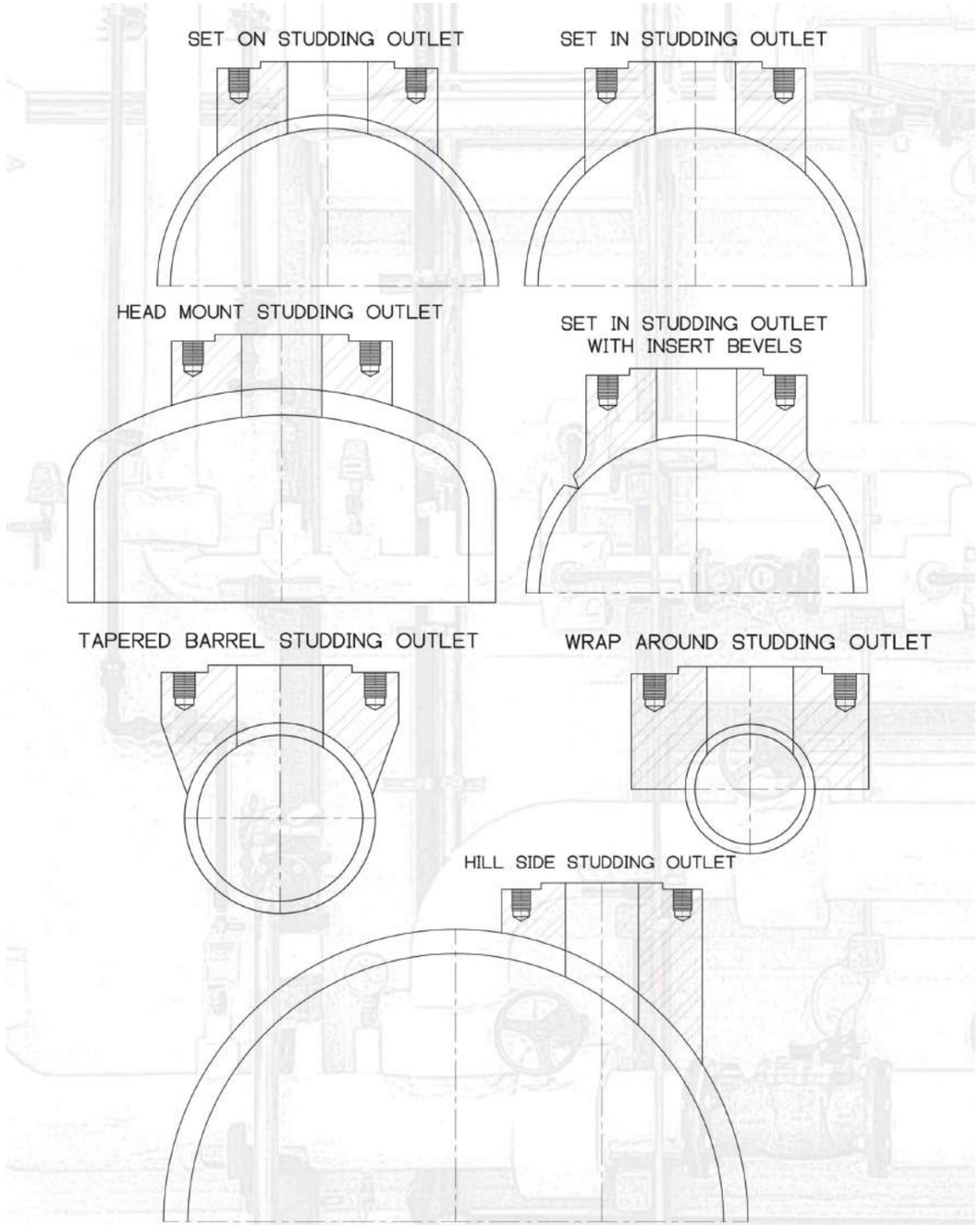

NOTE: STUD HOLES SHOWN OUT OF TRUE POSITION FOR ILLUSTRATION PURPOSES, STUD HOLES WILL STRADDLE CENTERLINE

MARKING DETAIL AND COMMON FNG ABBREVIATIONS

BWB	BUTT WELD OUTLET
SWB	SOCKET WELD OUTLET
THB	THREADED OUTLET
BLB	BUTT WELD LATERAL OUTLET
SLB	SOCKET WELD LATERAL OUTLET
TLB	THREADED LATERAL OUTLET
BEB	BUTT WELD ELBOW OUTLET
SEB	SOCKET WELD ELBOW OUTLET
TEB	THREADED ELBOW OUTLET
BIB	BUTT WELD INSERT OUTLET
SIB	SOCKET WELD INSERT OUTLET
TIB	THREADED INSERT OUTLET
BNB	BEVELED NIPPLE OUTLET
PNB	PLAIN NIPPLE OUTLET
TNB	THREADED NIPPLE OUTLET
FLB	FLANGED OUTLET
FIB	FLANGED INSERT OUTLET
CBWB	COMBINATION WELD BOSS
SWWB	SOCKET WELD WELD BOSS
THWB	THREADED WELD BOSS
CBCB	COMBINATION COUPLET BOSS
SWCB	SOCKET WELD COUPLET BOSS
THCB	THREADED COUPLET BOSS
SRVIB	SAFETY RELIEF VALVE INSERT OUTLET
LWV	LOW WELD VOLUME

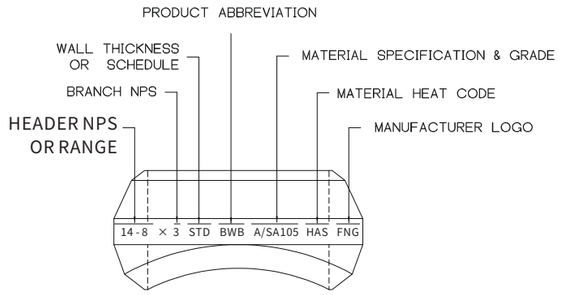

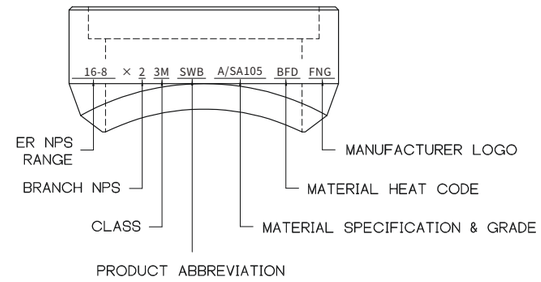

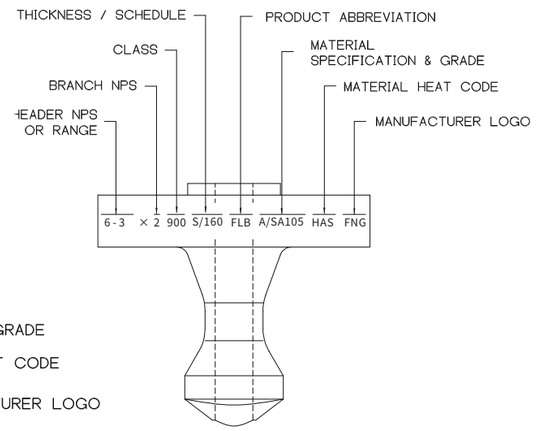

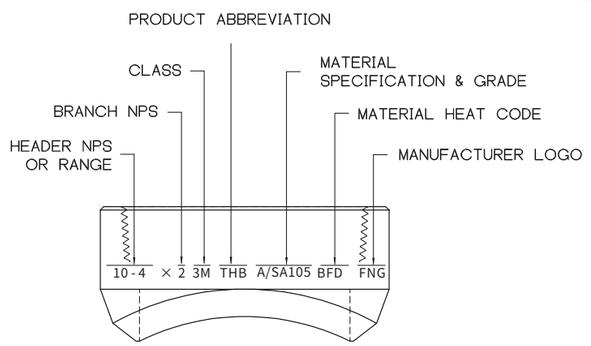

CONSOLIDATION CHART

TRUE - STRAIGHT BORE DESIGN
STAINLESS - CHROME - ALLOY BRANCHETTES®
NON-IMPRESSION DIE FORGED

SCH.10s BUTT WELD OUTLET									
1/2	3/4	1	1 1/4	1 1/2	2	2 1/2	3	4	6
1 1/4 - 1/2 36 - 1 1 /2	2 - 3/4 36 - 2 1/2	1 1/4 - 1 4 - 1 1/2 36 - 5	1 1/2 - 1 1/4 2 1/2 - 2 6 - 3 36 - 8	1 1/2 2 3 - 2 1/2 10 - 3 1/2 36 - 12	2 3 - 2 1/2 5 - 3 1/2 18 - 6 36 - 20	2 1/2 3 1/2 - 3 5 - 4 10 - 6 26 - 12 36 - 28	3 3 1/2 4 6 - 5 14 - 8 40 - 16 84 - 42	4 5 6 10 - 8 18 - 12 36 - 20 84 - 38	6 8 10 14 - 12 18 - 16 26 - 20 42 - 28 84 - 44

STANDARD,SCH.40s,&CL.3M BUTTWELD OUTLET&SOCKETWELD OUTLET									
1/2	3/4	1	1 1/4	1 1/2	2	2 1/2	3	4	6
1 - 1/2 36 - 1 1/4	2 - 3/4 36 - 2 1/2	1 3 1/2 - 1 1/4 36 - 4	1 1/4 2 - 1 1/2 6 - 2 1/2 36 - 8	1 1/2 3 - 2 8 - 3 1/2 36 - 10	2 3 - 2 1/2 6 - 3 1/2 16 - 8 36 - 18	2 1/2 3 1/2 - 3 5 - 4 12 - 6 24 - 14 36 - 26	3 4 - 3 1/2 6 - 5 14 - 8 36 - 16	4 5 6 10 - 8 20 - 12 64 - 22	6 8 10 14 - 12 18 - 16 24 - 20 34 - 26 42 - 36

EXTRA STRONG & SCH.80s BUTT WELD OUTLET									
1/2	3/4	1	1 1/4	1 1/2	2	2 1/2	3	4	6
3/4 - 1/2 36 - 1	1 1/2 - 3/4 36 - 2	1 3 - 1 1/4 36 - 3 1/2	1 1/4 4 - 1 1/2 36 - 5	1 1/2 2 1/2 - 2 8 - 3 36 - 10	2 2 1/2 4 - 3 14 - 5 36 - 16	2 1/2 3 1/2 - 3 6 - 4 24 - 8 36 - 26	3 4 - 3 1/2 6 - 5 10 - 8 32 - 12 36 - 34	4 5 6 10 - 8 22 - 12 56 - 24	6 8 10 14 - 12 18 - 16 24 - 20 34 - 26 42 - 36

SCH.160 & CL.6M BUTTWELD &SOCKET WELD OUTLET					
1/2	3/4	1	1 1/4	1 1/2	2
1/2 36 - 3/4	1 - 3/4 36 - 1 1/4	2 - 1 36 - 2 1/2	1 1/4 4 - 1 1/2 36 - 5	2 1/2 - 1 1/2 6 - 3 36 - 8	2 3 - 2 1/2 10 - 3 1/2 36 - 12

XX-STRONG & CL.9M BUTT WELD & SOCKET WELD OUTLET					
1/2	3/4	1	1 1/4	1 1/2	2
36 - 1/2	3/4 36 - 1	1 36 - 1 1/4	2 1/2 - 1 1/4 36 - 3	2 1/2 - 1 1/2 3 1/2 - 3 36 - 4	2 1/2 - 2 6 - 3 36 - 8

CL.3M, CL.6M,& CL.10M THREADED OUTLET					
1/2	3/4	1	1 1/4	1 1/2	2
1/2 1 1/2 - 3/4 36 - 2	3/4 2 1/2 - 1 36 - 3	1 2 - 1 1/4 4 - 2 1/2 36 - 5	1 1/2 - 1 1/4 3 1/2 - 2 8 - 4 36 - 10	1 1/2 2 3 1/2 - 2 1/2 10 - 4 36 - 12	2 2 1/2 4 - 3 10 - 5 18 - 12 36 - 20

TRUE-STRAIGHT BORE DESIGN
CARBON STEEL A/SA1O5 OUTLET
IMPRESSION DIE FORGED

STANDARD BUTT WELD OUTLET								
1/2	3/4	1	1 1/4	1 1/2	2	2 1/2	3	4
36 - 1 1/4 1 - 1/2	36 - 2 1/2 2 - 3/4	36 - 2 3 1/2 - 1 1/4 1	36 - 8 6 - 2 1/2 2 - 1 1/2 1 1/4	36 - 4 3 1/2 - 2 1 1/2	36 - 8 6 - 3 1/2 3 - 2 1/2 2	36 - 12 10 - 5 4 - 3 2 1/2	36 - 16 14 - 8 6 - 5 4 - 3 1/2 3	36 - 22 20 - 12 10 - 8 6 - 5 4

EXTRA STRONG BUTT WELD OUTLET								
1/2	3/4	1	1 1/4	1 1/2	2	2 1/2	3	4
36 - 1 3/4 - 1/2	36 - 2 1 1/2 - 3/4	36 - 2 3 - 1 1/4 1	36 - 6 5 - 2 1/2 2 - 1 1/4	36 - 4 3 1/2 - 2 1 /2	36 - 8 6 - 3 1/2 3 - 2 1/2 2	36 - 12 10 - 5 4 - 3 2 1/2	36 - 16 14 - 8 6 - 5 4 - 3 1/2 3	36 - 22 20 - 12 10 - 8 6 - 5 4

CL.3M SOCKET WELD OUTLET					
1/2	3/4	1	1 1/4	1 1/2	2
36 - 3/4 1/2	36 - 1 1/2 1 1/4 - 3/4	36 - 3 2 1/2 - 1 1/4 1	36 - 4 3 1/2 - 2 1 1/2 - 1 1/4	36 - 6 5 - 3 2 1/2 - 2 1 1/2	36 - 8 6 - 4 3 1/2 - 2 1/2 2

CL.3M THREADED OUTLET					
1/2	3/4	1	1 1/4	1 1/2	2
36 - 3/4 1/2	36 - 1 1/2 1 1/4 - 3/4	36 - 3 2 1/2 - 1 1/4 1	36 - 4 3 1/2 - 2 1 1/2 - 1 1/4	36 - 6 5 - 3 2 1/2 - 2 1 1/2	36 - 8 6 - 4 3 1/2 - 2 1/2 2

INTEGRALLY REINFORCED BRANCH CONNECTIONS NPS 6 INCH AND SMALLER MANUFACTURED IN ACCORDANCE WITH MSS SP-97 BY WELDING OUTLETS INC. WILL TYPICALLY BE MANUFACTURED UTILIZING A "CONSOLIDATION" DESIGN. EACH FITTING IS DESIGNED TO FIT A NUMBER OF RUN PIPE SIZES, E.G. 1" FITTING MARKED 36 – 4 WILL FIT ALL RUN PIPE SIZES FROM 4" TO 36". WHEN PLACED ON A 36" RUN PIPE, THERE WILL BE A MAXIMUM RADIAL GAP OF 1/16" BETWEEN THE TOP OF THE RUN PIPE AND THE BASE OF THE FITTING AT THE CROTCH. ACCORDING TO MSS SP-97 PARAGRAPH 3.3: THE MANUFACTURER HAS THE OPTION TO CONSOLIDATE RUN SIZES FOR A GIVEN BRANCH FOR ECONOMIC REASONS, PROVIDED THE DESIGNATED CONSOLIDATION GAP DISTANCE BETWEEN THE RUN PIPE RADIUS AND THE FITTING INLET RADIUS DOES NOT EXCEED 1/16".

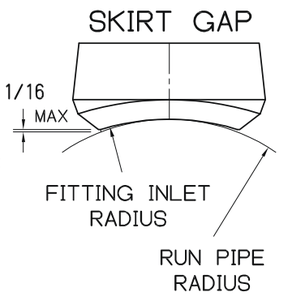

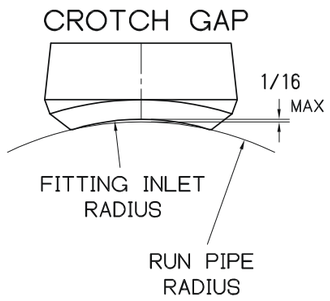

PIPE SIZES AND SCHEDULES

NPS	OD	PIPE SCHEDULE														
		5	10s	10	20	30	STD	40	60	XS	80	100	120	140	160	XXS
1/8	0.405		0,049 0,307	0,049 0,307		0,057 0,291	0,068 0,269	0,068 0,269		0,095 0,215	0,095 0,215					
1/4	0.540		0,065 0,410	0,065 0,410		0,073 0,394	0,088 0,364	0,088 0,364		0,119 0,302	0,119 0,302					
3/8	0.675		0,065 0,545	0,065 0,545		0,073 0,529	0,091 0,493	0,091 0,493		0,126 0,423	0,126 0,423					
1/2	0.840	0,065 0,710	0,083 0,674	0,083 0,674		0,095 0,650	0,109 0,622	0,109 0,622		0,147 0,546	0,147 0,546				0,188 0,464	0,294 0,252
3/4	1.050	0,065 0,920	0,083 0,884	0,083 0,884		0,095 0,860	0,113 0,824	0,113 0,824		0,154 0,742	0,154 0,742				0,219 0,612	0,308 0,434
1	1.315	0,065 1,185	0,109 1,097	0,109 1,097		0,114 1,087	0,133 1,049	0,133 1,049		0,179 0,957	0,179 0,957				0,250 0,815	0,358 0,599
1-1/4	1.660	0,065 1,530	0,109 1,442	0,109 1,442		0,117 1,426	0,140 1,380	0,140 1,380		0,191 1,278	0,191 1,278				0,250 1,160	0,382 0,896
1-1/2	1.900	0,065 1,770	0,109 1,682	0,109 1,682		0,125 1,650	0,145 1,610	0,145 1,610		0,200 1,500	0,200 1,500				0,281 1,338	0,400 1,100
2	2.375	0,065 2,245	0,109 2,157	0,109 2,157		0,125 2,125	0,154 2,067	0,154 2,067		0,218 1,939	0,218 1,939				0,344 1,687	0,436 1,503
2-1/2	2.875	0,083 2,709	0,120 2,635	0,120 2,635		0,188 2,499	0,203 2,469	0,203 2,469		0,276 2,323	0,276 2,323				0,375 2,125	0,552 1,771
3	3.500	0,083 3,334	0,120 3,260	0,120 3,260		0,188 3,124	0,216 3,068	0,216 3,068		0,300 2,900	0,300 2,900				0,438 2,624	0,600 2,300
3-1/2	4.000	0,083 3,834	0,120 3,760	0,120 3,760		0,188 3,624	0,226 3,548	0,226 3,548		0,318 3,364	0,318 3,364					
4	4.500	0,083 4,334	0,120 4,260	0,120 4,260		0,188 4,124	0,237 4,026	0,237 4,026		0,337 3,826	0,337 3,826		0,438 3,624		0,531 3,438	0,674 3,152
5	5.563	0,109 5,345	0,134 5,295	0,134 5,295			0,258 5,047	0,258 5,047		0,375 4,813	0,375 4,813		0,500 4,563		0,625 4,313	0,750 4,063
6	6.625	0,109 6,407	0,134 6,357	0,134 6,357			0,280 6,065	0,280 6,065		0,432 5,761	0,432 5,761		0,562 5,501		0,719 5,187	0,864 4,897
8	8.625	0,109 8,407	0,148 8,329	0,148 8,329	0,250 8,125	0,277 8,071	0,322 7,981	0,322 7,981	0,406 7,813	0,500 7,625	0,500 7,625	0,594 7,437	0,719 7,187	0,812 7,001	0,906 6,813	0,875 6,875
10	10.75	0,134 10,482	0,165 10,420	0,165 10,420	0,250 10,250	0,307 10,136	0,365 10,020	0,365 10,020	0,500 9,750	0,500 9,750	0,594 9,562	0,719 9,312	0,844 9,062	1,000 8,750	1,125 8,500	1,000 8,750
12	12.75	0,156 12,438	0,180 12,390	0,180 12,390	0,250 12,250	0,330 12,090	0,375 12,000	0,406 11,938	0,562 11,626	0,500 11,750	0,688 11,374	0,844 11,062	1,000 10,750	1,125 10,500	1,312 10,126	1,000 10,750
14	14.0	0,156 13,688	0,188 13,624	0,250 13,500	0,312 13,376	0,375 13,250	0,375 13,250	0,438 13,124	0,594 12,812	0,500 13,000	0,750 12,500	0,938 12,124	1,094 11,812	1,250 11,500	1,406 11,188	
16	16.0	0,165 15,670	0,188 15,624	0,250 15,500	0,312 15,376	0,375 15,250	0,375 15,250	0,500 15,000	0,656 14,688	0,500 15,000	0,844 14,312	1,031 13,938	1,219 13,562	1,438 13,124	1,594 12,812	
18	18.0	0,165 17,670	0,188 17,624	0,250 17,500	0,312 17,376	0,438 17,124	0,375 17,250	0,562 16,876	0,750 16,500	0,500 17,000	0,938 16,124	1,156 15,688	1,375 15,250	1,562 14,876	1,781 14,438	
20	20,0	0,188 19,624	0,218 19,564	0,250 19,500	0,375 19,250	0,500 19,000	0,375 19,250	0,594 18,812	0,812 18,376	0,500 19,000	1,031 17,938	1,281 17,438	1,500 17,000	1,750 16,500	1,969 16,062	
22	22.0	0,188 21,624	0,218 21,564	0,250 21,500	0,375 21,250	0,500 21,000	0,375 21,250		0,875 20,250	0,500 21,000	1,125 19,750	1,375 19,250	1,625 18,750	1,875 18,250	2,125 17,750	
24	24.0	0,218 23,564	0,250 23,500	0,250 23,500	0,375 23,250	0,562 22,876	0,375 23,250	0,688 22,624	0,969 22,062	0,500 23,000	1,219 21,562	1,531 20,938	1,812 20,376	2,062 19,876	2,344 19,312	
34	34.0			0,312 33,376	0,500 33,000	0,625 32,750	0,375 33,250	0,688 32,624		0,500 33,000						
36	36.0			0,312 35,376	0,500 35,000	0,625 34,750	0,375 35,250	0,750 34,500		0,500 35,000						
42	42.0						0,375 41,250			0,500 41,000						
48	48.0						0,375 47,250			0,500 47,000						

1. For reference only.
2. Values are in accordance with ASME B36.10M, unless specified otherwise.
3. Sch.10s Values are in accordance with ASME B36.19M.
4. Nominal (Average) Wall and the corresponding inner diameter are listed.

PIPE SIZES AND SCHEDULES

NPS	OD	PIPE SCHEDULE														
		5	10s	10	20	30	STD	40	60	XS	80	100	120	140	160	XXS
1/8	0.405		0.049	0.049		0.057	0.068	0.068		0.095	0.095					
			0.307	0.307		0.291	0.269	0.269		0.215	0.215					
1/4	0.540		0.065	0.065		0.073	0.088	0.088		0.119	0.119					
			0.410	0.410		0.394	0.364	0.364		0.302	0.302					
3/8	0.675		0.065	0.065		0.073	0.091	0.091		0.126	0.126					
			0.545	0.545		0.529	0.493	0.493		0.423	0.423					
1/2	0.840	0.065	0.083	0.083		0.095	0.109	0.109		0.147	0.147				0.188	0.294
		0.710	0.674	0.674		0.650	0.622	0.622		0.546	0.546				0.464	0.252
3/4	1.050	0.065	0.083	0.083		0.095	0.113	0.113		0.154	0.154				0.219	0.308
		0.920	0.884	0.884		0.860	0.824	0.824		0.742	0.742				0.612	0.434
1	1.315	0.065	0.109	0.109		0.114	0.133	0.133		0.179	0.179				0.250	0.358
		1.185	1.097	1.097		1.087	1.049	1.049		0.957	0.957				0.815	0.599
1-1/4	1.660	0.065	0.109	0.109		0.117	0.140	0.140		0.191	0.191				0.250	0.382
		1.530	1.442	1.442		1.426	1.380	1.380		1.278	1.278				1.160	0.896
1-1/2	1.900	0.065	0.109	0.109		0.125	0.145	0.145		0.200	0.200				0.281	0.400
		1.770	1.682	1.682		1.650	1.610	1.610		1.500	1.500				1.338	1.100
2	2.375	0.065	0.109	0.109		0.125	0.154	0.154		0.218	0.218				0.344	0.436
		2.245	2.157	2.157		2.125	2.067	2.067		1.939	1.939				1.687	1.503
2-1/2	2.875	0.083	0.120	0.120		0.188	0.203	0.203		0.276	0.276				0.375	0.552
		2.709	2.635	2.635		2.499	2.469	2.469		2.323	2.323				2.125	1.771
3	3.500	0.083	0.120	0.120		0.188	0.216	0.216		0.300	0.300				0.438	0.600
		3.334	3.260	3.260		3.124	3.068	3.068		2.900	2.900				2.624	2.300
3-1/2	4.000	0.083	0.120	0.120		0.188	0.226	0.226		0.318	0.318					
		3.834	3.760	3.760		3.624	3.548	3.548		3.364	3.364					
4	4.500	0.083	0.120	0.120		0.188	0.237	0.237		0.337	0.337		0.438		0.531	0.674
		4.334	4.260	4.260		4.124	4.026	4.026		3.826	3.826		3.624		3.438	3.152
5	5.563	0.109	0.134	0.134			0.258	0.258		0.375	0.375		0.500		0.625	0.750
		5.345	5.295	5.295			5.047	5.047		4.813	4.813		4.563		4.313	4.063
6	6.625	0.109	0.134	0.134			0.280	0.280		0.432	0.432		0.562		0.719	0.864
		6.407	6.357	6.357			6.065	6.065		5.761	5.761		5.501		5.187	4.897
8	8.625	0.109	0.148	0.148	0.250	0.277	0.322	0.322	0.406	0.500	0.500	0.594	0.719	0.812	0.906	0.875
		8.407	8.329	8.329	8.125	8.071	7.981	7.981	7.813	7.625	7.625	7.437	7.187	7.001	6.813	6.875
10	10.75	0.134	0.165	0.165	0.250	0.307	0.365	0.365	0.500	0.500	0.594	0.719	0.844	1.000	1.125	1.000
		10.482	10.420	10.420	10.250	10.136	10.020	10.020	9.750	9.750	9.562	9.312	9.062	8.750	8.500	8.750
12	12.75	0.156	0.180	0.180	0.250	0.330	0.375	0.406	0.562	0.500	0.688	0.844	1.000	1.125	1.312	1.000
		12.438	12.390	12.390	12.250	12.090	12.000	11.938	11.626	11.750	11.374	11.062	10.750	10.500	10.126	10.750
14	14.0	0.156	0.188	0.250	0.312	0.375	0.375	0.438	0.594	0.500	0.750	0.938	1.094	1.250	1.406	
		13.688	13.624	13.500	13.376	13.250	13.250	13.124	12.812	13.000	12.500	12.124	11.812	11.500	11.188	
16	16.0	0.165	0.188	0.250	0.312	0.375	0.375	0.500	0.656	0.500	0.844	1.031	1.219	1.438	1.594	
		15.670	15.624	15.500	15.376	15.250	15.250	15.000	14.688	15.000	14.312	13.938	13.562	13.124	12.812	
18	18.0	0.165	0.188	0.250	0.312	0.438	0.375	0.562	0.750	0.500	0.938	1.156	1.375	1.562	1.781	
		17.670	17.624	17.500	17.376	17.124	17.250	16.876	16.500	17.000	16.124	15.688	15.250	14.876	14.438	
20	20.0	0.188	0.218	0.250	0.375	0.500	0.375	0.594	0.812	0.500	1.031	1.281	1.500	1.750	1.969	
		19.624	19.564	19.500	19.250	19.000	19.250	18.812	18.376	19.000	17.938	17.438	17.000	16.500	16.062	
22	22.0	0.188	0.218	0.250	0.375	0.500	0.375		0.875	0.500	1.125	1.375	1.625	1.875	2.125	
		21.624	21.564	21.500	21.250	21.000	21.250		20.250	21.000	19.750	19.250	18.750	18.250	17.750	
24	24.0	0.218	0.250	0.250	0.375	0.562	0.375	0.688	0.969	0.500	1.219	1.531	1.812	2.062	2.344	
		23.564	23.500	23.500	23.250	22.876	23.250	22.624	22.062	23.000	21.562	20.938	20.376	19.876	19.312	
34	34.0			0.312	0.500	0.625	0.375	0.688		0.500						
				33.376	33.000	32.750	33.250	32.624		33.000						
36	36.0			0.312	0.500	0.625	0.375	0.750		0.500						
				35.376	35.000	34.750	35.250	34.500		35.000						
42	42.0						0.375			0.500						
							41.250			41.000						
48	48.0						0.375			0.500						
							47.250			47.000						

1. For reference only.
2. Values are in accordance with ASME B36.10M, unless specified otherwise.
3. Sch.10s Values are in accordance with ASME B36.19M.
4. Nominal (Average) Wall and the corresponding inner diameter are listed.

Pipe Nominal (Average) Wall Thickness

NPS	OD	PIPE SCHEDULE														
		5	10s	10	20	30	STD	40	60	XS	80	100	120	140	160	XXS
1/8	0.405		0.049	0.049		0.057	0.068	0.068		0.095	0.095					
1/4	0.540		0.065	0.065		0.073	0.088	0.088		0.119	0.119					
3/8	0.675		0.065	0.065		0.073	0.091	0.091		0.126	0.126					
1/2	0.840	0.065	0.083	0.083		0.095	0.109	0.109		0.147	0.147				0.188	0.294
3/4	1.050	0.065	0.083	0.083		0.095	0.113	0.113		0.154	0.154				0.219	0.308
1	1.315	0.065	0.109	0.109		0.114	0.133	0.133		0.179	0.179				0.250	0.358
1-1/4	1.660	0.065	0.109	0.109		0.117	0.140	0.140		0.191	0.191				0.250	0.382
1-1/2	1.900	0.065	0.109	0.109		0.125	0.145	0.145		0.200	0.200				0.281	0.400
2	2.375	0.065	0.109	0.109		0.125	0.154	0.154		0.218	0.218				0.344	0.436
2-1/2	2.875	0.083	0.120	0.120		0.188	0.203	0.203		0.276	0.276				0.375	0.552
3	3.500	0.083	0.120	0.120		0.188	0.216	0.216		0.300	0.300				0.438	0.600
3-1/2	4.000	0.083	0.120	0.120		0.188	0.226	0.226		0.318	0.318					
4	4.500	0.083	0.120	0.120		0.188	0.237	0.237		0.337	0.337		0.438		0.531	0.674
5	5.563	0.109	0.134	0.134			0.258	0.258		0.375	0.375		0.500		0.625	0.750
6	6.625	0.109	0.134	0.134			0.280	0.280		0.432	0.432		0.562		0.719	0.864
8	8.625	0.109	0.148	0.148	0.250	0.277	0.322	0.322	0.406	0.500	0.500	0.594	0.719	0.812	0.906	0.875
10	10.75	0.134	0.165	0.165	0.250	0.307	0.365	0.365	0.500	0.500	0.594	0.719	0.844	1.000	1.125	1.000
12	12.75	0.156	0.180	0.180	0.250	0.330	0.375	0.406	0.562	0.500	0.688	0.844	1.000	1.125	1.312	1.000
14	14.0	0.156	0.188	0.250	0.312	0.375	0.375	0.438	0.594	0.500	0.750	0.938	1.094	1.250	1.406	
16	16.0	0.165	0.188	0.250	0.312	0.375	0.375	0.500	0.656	0.500	0.844	1.031	1.219	1.438	1.594	
18	18.0	0.165	0.188	0.250	0.312	0.438	0.375	0.562	0.750	0.500	0.938	1.156	1.375	1.562	1.781	
20	20.0	0.188	0.218	0.250	0.375	0.500	0.375	0.594	0.812	0.500	1.031	1.281	1.500	1.750	1.969	
22	22.0	0.188	0.218	0.250	0.375	0.500	0.375		0.875	0.500	1.125	1.375	1.625	1.875	2.125	
24	24.0	0.218	0.250	0.250	0.375	0.562	0.375	0.688	0.969	0.500	1.219	1.531	1.812	2.062	2.344	
34	34.0			0.312	0.500	0.625	0.375	0.688		0.500						
36	36.0			0.312	0.500	0.625	0.375	0.750		0.500						
42	42.0						0.375			0.500						
48	48.0						0.375			0.500						

Pipe Inner Diameter

NPS	OD	PIPE SCHEDULE														
		5	10s	10	20	30	STD	40	60	XS	80	100	120	140	160	XXS
1/8	0.405		0.307	0.307		0.291	0.269	0.269		0.215	0.215					
1/4	0.540		0.410	0.410		0.394	0.364	0.364		0.302	0.302					
3/8	0.675		0.545	0.545		0.529	0.493	0.493		0.423	0.423					
1/2	0.840	0.710	0.674	0.674		0.650	0.622	0.622		0.546	0.546				0.464	0.252
3/4	1.050	0.920	0.884	0.884		0.860	0.824	0.824		0.742	0.742				0.612	0.434
1	1.315	1.185	1.097	1.097		1.087	1.049	1.049		0.957	0.957				0.815	0.599
1-1/4	1.660	1.530	1.442	1.442		1.426	1.380	1.380		1.278	1.278				1.160	0.896
1-1/2	1.900	1.770	1.682	1.682		1.650	1.610	1.610		1.500	1.500				1.338	1.100
2	2.375	2.245	2.157	2.157		2.125	2.067	2.067		1.939	1.939				1.687	1.503
2-1/2	2.875	2.709	2.635	2.635		2.499	2.469	2.469		2.323	2.323				2.125	1.771
3	3.500	3.334	3.260	3.260		3.124	3.068	3.068		2.900	2.900				2.624	2.300
3-1/2	4.000	3.834	3.760	3.760		3.624	3.548	3.548		3.364	3.364					
4	4.500	4.334	4.260	4.260		4.124	4.026	4.026		3.826	3.826		3.624		3.438	3.152
5	5.563	5.345	5.295	5.295			5.047	5.047		4.813	4.813		4.563		4.313	4.063
6	6.625	6.407	6.357	6.357			6.065	6.065		5.761	5.761		5.501		5.187	4.897
8	8.625	8.407	8.329	8.329	8.125	8.071	7.981	7.981	7.813	7.625	7.625	7.437	7.187	7.001	6.813	6.875
10	10.75	10.482	10.420	10.420	10.250	10.136	10.020	10.020	9.750	9.750	9.562	9.312	9.062	8.750	8.500	8.750
12	12.75	12.438	12.390	12.390	12.250	12.090	12.000	11.938	11.626	11.750	11.374	11.062	10.750	10.500	10.126	10.750
14	14.0	13.688	13.624	13.500	13.376	13.250	13.250	13.124	12.812	13.000	12.500	12.124	11.812	11.500	11.188	
16	16.0	15.670	15.624	15.500	15.376	15.250	15.250	15.000	14.688	15.000	14.312	13.938	13.562	13.124	12.812	
18	18.0	17.670	17.624	17.500	17.376	17.124	17.250	16.876	16.500	17.000	16.124	15.688	15.250	14.876	14.438	
20	20.0	19.624	19.564	19.500	19.250	19.000	19.250	18.812	18.376	19.000	17.938	17.438	17.000	16.500	16.062	
22	22.0	21.624	21.564	21.500	21.250	21.000	21.250		20.250	21.000	19.750	19.250	18.750	18.250	17.750	
24	24.0	23.564	23.500	23.500	23.250	22.876	23.250	22.624	22.062	23.000	21.562	20.938	20.376	19.876	19.312	
34	34.0			33.376	33.000	32.750	33.250	32.624		33.000						
36	36.0			35.376	35.000	34.750	35.250	34.500		35.000						
42	42.0						41.250			41.000						
48	48.0						47.250			47.000						

1. For reference only.
2. Values are in accordance with ASME B36.10M, unless specified otherwise.
3. Sch.10s Values are in accordance with ASME B36.19M.

MATERIAL SPECIFICATIONS SHEET

IDENTIFICATION SYMBOL	UNS#	BAR	FORGINGS	WELD FITTINGS	PIPE	PLATE	ASME WELD CLASSIFICATION
Austenitic Stainless							
304	S30400	A276/479	A182	A403WP	A312	A240	P8
304H	S30409	A276/479	A182	A403WP	A312	A240	P8
304L	S30403	A276/479	A182	A403WP	A312	A240	P8
316	S31600	A276/479	A182	A403WP	A312	A240	P8
316H	S31609	A276/479	A182	A403WP	A312	A240	P8
316L	S31603	A276/479	A182	A403WP	A312	A240	P8
317L	S31703	A279/479	A182	A403WP	A312	A240	P8
321	S32100	A276/479	A182	A403WP	A312	A240	P8
321H	S32109	A276/479	A182	A403WP	A312	A240	P8
347	S34700	A276/479	A182	A403WP	A312	A240	P8
347H	S34709	A276/479	A182	A403WP	A312	A240	P8
F44 (254SMO)	S31254	A276/479	A182	A403WP	A312	A240	P8
Ferritic-Austenitic Stainless							
F51 (DUPLEX)	S31803	A276/479	A182	A182/A815WP	A790	A240	P10H
F53 (SUPER DUPLEX)	S32750	A479	A182	A182/A815WP	A790	A240	P10H
F55 (ZERON 100)	S32760	A276	A182	A182/A815WP	A790	A240	S-10H
F60	S32205	A276	A182	A182/A815WP	A790	A240	
Low Alloy Steels							
F5	K41545	A182	A182	A234	A335	A387	P5B
F9	K90941	A182	A182	A234	A335	A387	P5B
F91	K90901	A182	A182	A234	A335	A387	P5B
F11 Class 1	K11597	A182	A182	A234	A335	A387	P4
F11 Class 2 & 3	K11572	A182	A182	A234	A335	A387	P4
F22 Class 1 & 3	K21590	A182	A182	A234	A335	A387	P5A
Carbon-Steel		A105/A695	A105	A234	A106	A516	P1
Low-Temperature Steel		A350-LF2 CL1	A350-LF2 CL1	A420WPL6	A333GR6		P1
High Strength Transmission Service			A694F42 - F70	A860 / SP-75	A381 / API-5L		S-1
Nickel-Alloys							
Nickel-200	N02200	B160	B564	B366 WPN	B161	B162	P41
Alloy-400	N04400	B164	B564	B366 WPNC	B165	B127	P42
Alloy-600	N06600	B166	B564	B366 WPNC1	B167/B516	B168	P43
Alloy-625	N06625	B466	B564	B366 WPNCMC	B444	B443	P43
Alloy-800H	N08810	B408	B564	B366 WPNICIO	B407	B409	P45
Alloy-800HT	N08811	B408	B564	B366 WPNICII	B407	B409	P45
Alloy-825	N08825	B425	B564	B366 WPNICMC	B423	B424	P45
Corrosive High-Temp. Service							
A20	N08020	B473	B462	B366 WP20CB	B729	B463	P45
6 Moly-AL6XN	N08367	B691	B462	B366 WP6XN	B690	B688/A240	P45
C276	N10276	B574	B564/B462	B366 WPHC276	B619/B622	B575	P44
HAST-B2	N10665	B335	B564/B462	B366 WPHB-2	B619/B622	B333	P44
C-22	N06022	B574	B564/B462	B366 WPHC22	B619/B622	B575	P44
Titanium							
Grade 2	R50400	B348	B381 F2	B363 WPT2	B338	B265	P51
Grade 7	R52400	B348	B381 F7	B363 WPT7	B338	B265	P51
Copper - Nickel							
70-30 (MIL-STD)	C71500	Reference MIL-C & MIL-F Standards					P34
90-10 (MIL-STD)	C70600						P34
Cr-Mo Alloy Steel							
4130	G41300	A29 / A322	A711	A322	A519	A829	

三星九千认证
Beijing Sanxing 9000 Certification Body Co.,Ltd.

质量管理体系认证证书

证书编号：03124Q20305R3S

兹证明：**盐城吉成机械有限公司**

统一社会信用代码：91320925669638516E

地址：**江苏省盐城市建湖县民营科技创业园五号路 22 号**

质量管理体系符合

GB/T 19001-2016/ISO 9001:2015 标准

该质量管理体系适用于：

资质许可范围内的锻制管件、钢制锻造法兰的制造

颁证日期:2024 年 08 月 20 日

有效期至:2027 年 09 月 15 日

签发人
北京三星九千认证中心有限公司

注：在一个认证周期内获证组织定期接受监督审核且合格后此证书保持有效，可扫描二维码获取当前状态
本证书信息可在本机构网站（www.sanxing9000.com)及国家认证认可监督管理委员会官方网站（www.cnca.gov.cn）上查询

中国认可
国际互认
管理体系
MANAGEMENT SYSTEM
CNAS C031-M

北京市西城区德胜门外大街乙10号1-3六层101室

CERTIFICATE OF CONFORMITY OF QUALITY MANAGEMENT SYSTEM CERTIFICATION

Certificate No. 03124Q20305R3S

This is to certify the quality management system of

YANCHENG JICHENG MACHINERY CO., LTD

Unified social credit code: 91320925669638516E

Add: No.22, 5th Road, Private Science and Technology Pioneer Park, Jianhu County, Yancheng City, Jiangsu Province, China

is in conformity with

GB/T 19001-2016/ISO 9001:2015 standard

This certificate is valid to the following product(s)/service

Manufacture of forged pipe fittings and steel forged flanges within the scope of qualification license

Date of Issue: Aug 20th,2024

Date of Expiry: Sep 15th,2027

Signer
Beijing Sanxing 9000 Certification Body Co., Ltd.

Notice: The organization must be audited regularly within one certification cycle. Upon qualified, the certificate would be valid and QR code can be scanned to obtain its current status. The certificate information can be queried on the Beijing Sanxing 9000 Certification Body Co., Ltd 's website by www.sanxing9000.com or certification and accreditation administration of the P.R.C. website by www.cnca.gov.cn.

中国认可
国际互认
管理体系
MANAGEMENT SYSTEM
CNAS C031-M

Room 101, 6F, No.B10, Deshengmenwai Street, Xicheng District, Beijing, China